〈〈 健康 科技 可靠 便利

宁波柯力电气制造有限公司

Keli Electric Manufacturing（Ning Bo）Co.,Ltd.

地址:中国宁波江北投资创业园C区长兴路199号

Add:NO.199 Changxing Road,Jiangbei District,Ningbo,China.

传真(Fax):0574-87562289 87562271

E-mail:keli@kelichina.com

邮编(P.C):315033

Http://www.kelichina.com

服务热线/Service free number

400-887-4165 800-857-4165

2011年4月版(产品总样本第21版)

Keli Electric 柯力电气

2011年4月版(产品总样本第21版)

宁波柯力电气制造有限公司

Keli Electric Manufacturing（Ning Bo）Co.,Ltd.

宁波柯力电气制造有限公司
KELI ELECTRIC MANUFACTURING(NINGBO)CO.,LTD.

企业简介

宁波柯力电气制造有限公司，是目前中国最大的称重元件公司。公司专业研制和生产高精度称重传感器、称重仪表、电子称重系统和分析仪器，凭借雄厚的技术开发力量和精良的生产、检测实验设备，年生产能力达到300万只传感器、60万台称重仪表、6500台（套）称重系统和2万套分析仪器。

公司是中国衡器协会副理事长单位、中国《工业计量》协会副理事长单位、国家级高新技术企业、浙江省质量信得过企业，公司获得“全国轻工业卓越绩效先进企业”（2010年），宁波“市级工程技术中心”、江北区“510工程企业”、浙江省名牌产品、宁波市名牌产品、宁波市知名商标等多项殊荣。

公司严格依照国际法制计量组织OIML R60号标准组织生产，在企业内部，建立、实施和保持了ISO9001：2008质量管理体系，2008年初又分别通过了标准化良好行为A级证书和计量检测能力确认合格证书，制造的传感器具有防腐、防水、防爆、防震、防雷击等特点，并通过了桥式QS、柱式ZSF、波纹管HSX、悬臂梁SB、悬臂梁SQB、S型DEE等五十多种系列产品的OIML国际产品认证和悬臂梁SQBY、桥式QSEC的NTEP国际产品认证；传感器桥式QS、悬臂梁SB、悬臂梁SQB、柱式ZS、扭环式NHS等26种系列产品和仪表XK3118T1/T3/T4/T5/T10通过了CE认证，深受用户青睐。

公司产品销售网络遍布全国，其中钢制传感器长期以来占据了国内市场50% 以上的销售份额。2000年，柯力在衡器行业率先设立800免费服务热线，2007年又开通了现场用户手机拨打的400全国服务热线。公司已在全国各省市设立了30个区域办事处，并在沈阳、石家庄、郑州、济南、常州、兰州、武汉、重庆、广州、青岛、西安等10个城市设立国内售后服务点，已经建立了完整的市场、销售、服务体系。在国际市场的开拓中，已与100多个国家与地区的客商建立了广泛的贸易合作关系，并在法兰克福及新加坡城成立柯力欧洲公司及柯力新加坡公司，“柯力品牌”全面走向了国际市场。

柯力坚持“求实创新、服务员工、成就客户”的企业理念，公司导入职业健康安全管理OHSAS体系。2009年底，开始在公司试运行。2010年7月，取得《职业健康安全管理体系认证证书》。

公司重视新产品开发和技术创新，实施品牌差异化路线，推出SNK、OAP等高中端系列品牌。在技术领域中已形成了称重传感器、仪器仪表、称重系统、压力传感器、物联网技术、分析仪器等系列化的人才队伍；在实验设备上形成了表面处理，环境实验、振动实验、疲劳实验、EMC实验、材料实验、ROHS检测实验、应力应变实验、温度试验，冲击试验、包装跌落等十一大实验室，为公司的进一步快速发展奠定了雄厚的技术基础。

今天，柯力正在积极建设国际最大的称重传感器生产基地和筹建物联网事业部。按照国际化、科技化、多元化、集团化、服务化的发展战略，通过运用资本经营，柯力正从单一传感器生产商向传感器、仪表、物联网的综合性公司发展，努力建设成为国际一流的物联网公司，成为行业内全球市场不可或缺的一员。

Keli Electric

RoHS OIML

BRIEF INTRODUCTION

Keli Electric Manufacturing (Ningbo) Co., Ltd. is the largest manufacturer of load cells in China so far. We are specialized in producing high precision load cells， indicators and electronic weighing systems. Our annual production capacity is up to 3 million pieces of load cells, 0.6 million weighing indicators and 6500 sets of weighing systems, with our strong R&D ability and advanced equipments for production, inspection and experiment.

Keli is the vice-chief-director of CWIA (China Weighing Instrument Association), the vice-chief-director of China Industrial Measurement Association, National High-tech Enterprise, Enterprise of Quality of Zhejiang Province. Our company also gain reputation of National Light Industry Advanced Performance Enterprise (2010), City-level Engeneering Center of Ningbo City, “510 Project Enterprise” of Jiangbei District, Brand Product of Zhejiang Province, Brand Product of Ningbo City, Famous Brand of Ningbo City, etc.

Strictly according to the OIML R60 and ISO9001:2008, we can supply various load cells with high precision, reliable performance and super advantages in anti-erosion, waterproof, anti-explosion, shockproof and anti-lightning as well. 50 kinds of products have been OIML approved including double ended shear beam type QS, column type ZSF, bellow type HSX, shear beam type SB and SQB, S type DEE etc. And shear beam type SQBY, double ended shear beam type QSEC have been NTEP approved. 26 series of load cell including double ended shear beam type QS, shear beam type SB and SQB, column type ZS, ring type NHS and indicators XK3118T1/T3/T5/T10 have been CE approved. All these products are deeply welcome to our clients.

We have set up a wide sales network all over the country and occupied more than 50% share of domestic market for alloy load cell. In 2000 Keli was the first one who set up 800 hotline in Chinese weighing industry. In 2007 we started the 400 hotline which could be dialed by cell phone. We have set up 30 offices all over the country, and after-service office in Shenyang, Shijiazhuang, Zhengzhou, Jinan, Changzhou, Lanzhou, Wuhan, Chongqing, Guangzhou, Qingdao, Xi'an. we have set up good partnerships with customers from more than 100 countries, Keli brand has already walked toward international market successfully.

Keli insists on “practical& innovative, accomplishes the staff, the achievement customer” and introduced OCCUPATIONAL HEALTH & SAFETY ADVISORY SERVICES (OHSAS), beginning in the end of 2009, and was approved OHSAS Certificate in June of 2010.

Concentrating on new products developing and brand differentation, and carrying out high-end brand, like SNK,OAP etc .We have formed working teams in load cells, indicators, weighing systems, pressure sensor， construction load cells and internet of things technology. Meanwhile, we have total 11 modern large labs for surface treatment, Environment testing, oscillation testing, fatigue testing, EMC testing, material analysis, ROHS Inspection, stress strain testing, temperature testing, impacting testing and packaging drop testing, which have established solid foundation for the further rapid development for Keli.

Now, Keli has been striving to be the largest manufacturer of weighing components and preparing to build the division of the Internet of Things. As Internationalization technology, Science, System, Group, service direction, keli places emphasis on developing related industries of internet of things and now is developing from a producer of load cell to a supplier of whole set weighing system, consequently grows up to one of the most important suppliers of weighing market.

精准品质 柯力制造　　Precise Quality Made by KELI

公司产品的生产过程中，从原材料采购，检测设备、生产设备以至产品包装的全过程严格执行ROHS制作流程。

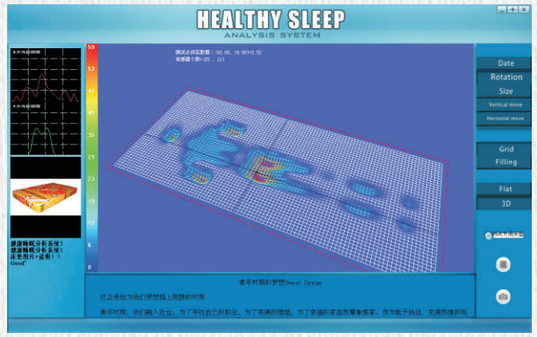

健康睡眠分析系统

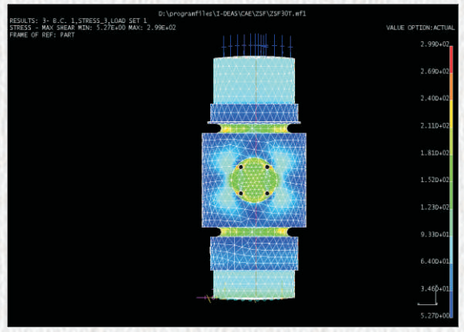

分析软件

RoHS 标识
RoHS mark

公司对各类专业应用领域的研发十分重视，主笔起草《高温称重传感器行业标准》，同时还积极参与起草《数字传感器行业标准》和《应变计国家标准》并制定《传感器国家标准》，为中国计量事业作出了应有贡献。

应力应变分析实验室
功用：通过对应变计应力分析、验证其技术指标符合性，为国内仅有几套应变应力分析设备。

全国高温传感器行业标准起草单位

四轴联动龙门铣加工中心

公司机加工分厂高温节能热处理设备

500T高精度全自动叠加式力标准机

国际 / 文化 / 多元

做中国传感器产业最佳品牌 建国际一流传感器企业
Do the best sensor brand in China, establish the toppest enterprise in world

公司从事研发技术人员约百余人，分别从事机械、电子、软件开发等专业领域的开发与研究，形成了传感器开发、仪表开发等专业的开发团队，每年约开发I类15项、II类25项，III类100多项新产品，开发的产品涵盖了各类结构的传感器、各用途的仪表。取得了不锈钢称重传感器等多项实用新型、发明专利。同时开发了条形码系统、配料系统KLBSS-FEED、Scale2008等软件。按照公司的发展战略，公司的研发正在朝称重元件技术领域的更高方向发展。

公司产品销售网络遍布全国，其中钢制传感器长期以来占据了国内市场50% 以上的销售份额。2000年，柯力在衡器行业率先设立800免费服务热线，2007年又开通了现场用户手机拨打的400全国服务热线。公司目前已在全国各省市设立了30个区域办事处，并在沈阳、石家庄、郑州、济南、常州、兰州、武汉、重庆、广州8城市设立国内售后服务点，已经建立了完整的市场、销售、服务体系。在国际市场的开拓中，已与100多个国家与地区的客商建立了广泛的贸易合作关系，并在法兰克福及新加坡城成立柯力欧洲公司及柯力新加坡公司，“柯力品牌”全面走向了国际市场。

物流中心

国际 / 文化 / 多元

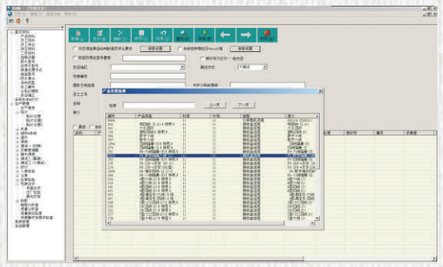

条形码管理系统

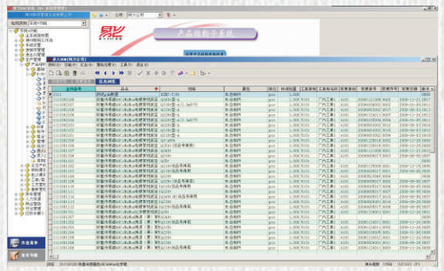

ERP管理系统

CRM软件

柯力文件用户端

品质与服务
Quality & Service

我们的品质保证 QUALITY Guarantee


高新技术企业认定证书

企业名称：

统一编号：

有效期二年

科学技术厅 年 月 日


宁波柯力电气制造有限公司

中国衡器协会

副理事长单位


计量器具型式批准证书


中华人民共和国

制造计量器具许可证


中华人民共和国

制造计量器具许可证


中华人民共和国

制造计量器具许可证


中华人民共和国

制造计量器具许可证


中华人民共和国

制造计量器具许可证


防爆合格证


National Type Evaluation Program

Certificate of Conformance


OIML CERTIFICATE OF CONFORMITY


特种设备

型式试验合格证


计量检测能力确认合格证书


CERTIFICATE OF COMPLIANCE


采用国际标准产品标志证书


QUALITY MANAGEMENT SYSTEM CERTIFICATE

ISO9001: 2000

GB/T 19001-2000

我们的售后服务 Customer Service

我公司提供的产品均是具有自主知识产权，自主研发、自主生产的产品。为用户提供高效全面的服务，最大程度的保障用户的切身利益是我们坚持不变的服务原则。为了给用户提供最高品质的服务，我们视服务为最重要的产品，力求做到服务的专业化、多元化、层次化，为用户提供包括产品咨询、产品设计、项目实施、项目维护、专业培训等在内的长期、全面的技术服务与支持。并承诺提供最佳的技术支持及售后服务，保证产品运行于最佳状态。

All of our products have Independent Intellectual Property Rights, Independent research, Independent produce, Supplying high–efficiency and all–around service to our customer, guarantee customer`s Benefit in whole hog are our perseverance service principle. In order to supply top–quality service to customer, we are trying our best to make our service more specialization, multi–element, multi–level, Supplying long term, all–around technic service and support which in the field of produce consultation, produce design, project implementation and maintenance, professional training, meanwhile , we promise to supply best technic support and sales service to guarantee our product in the best situation.

产品目录 INDEX

产品目录 INDEX

产品目录 INDEX

温馨提示：

样本内有关尺寸和参数仅供选型时参考，产品优化改善后恕不再另行通知，请广大用户订货前进一步与公司作沟通确认！

Indicate:

Related drawings and parameter in catalogue is for reference, please contact us to confirm before order.

数字传感器简介

Brief introduction of the digital load cell

数字传感器是在电阻应变式传感器基础上，结合现代微电子技术、微型计算机技术集成而发展起来的一种新型电子称重技术。它由模拟传感器和数字转换模块两部分组成。数字模块由高度集成化的IC电路，采用SMT表面贴装技术制成，主要包括：放大器、A/D转换器、控制器（MCU）、存储器、接口电路和数字化温度传感器等。

Digital loadcell is a late-new electric weighing technology combined with modern microelectronics Tech & microcomputer Tech, based on the strain gauge load cells.It includes of analog load cell and digital convert module; Digital module is made up of high compositive IC circuit with SMT surface-stick technology, mainly including amplifier, A/D convertor, controller (CPU), memorizer, interface circuit and digital temperature load cell etc.

数字传感器的功能特点

Characteristics for digital load cell`s function

1、具有较高的精度和可靠性，一般在C3级以上。
2、组秤灵活。在特殊场合组秤应用时可实现免标定，而且不同量程的传感器在不影响系统精度和过载能力的情况下可以实现互换。
3、抗干扰能力强。具备较高的长期稳定性和一致性。
4、便于故障诊断和分析。
5、具有较强的防作弊能力。

1、Higher precision and reliability, C3
2、More flexible, without calibration in special application loadcells with different capacities can be exchanged, which will not affect the accuracy and overload capacity of the whole system
3、Good Anti-Jumping capacity. higher stability and consistency.
4、Easy for trouble diagnose and analyse
5、Very strong anti-cheat abitity.

数字式管理软件

Digital Managing Software

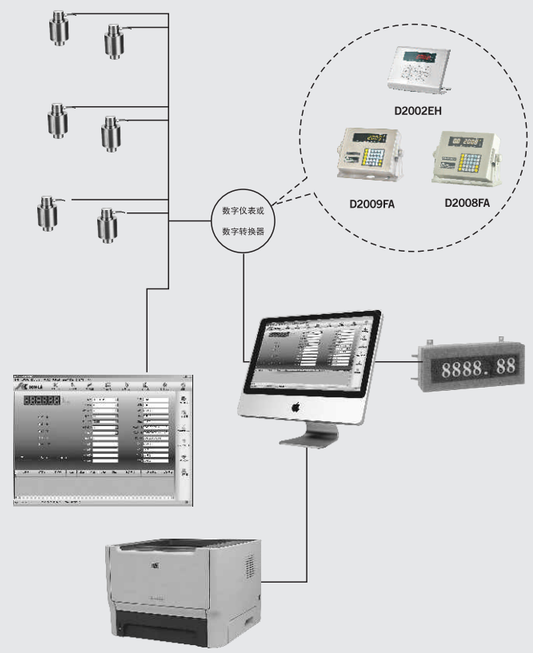

人机界面友好，试用简单方便；功能丰富，
可由计算机完成重量标定，自动四角调整、称重数据
维护、查询、统计及故障检测等功能；无需称重显示器，
系统安全可靠。

The software is used and muli-functional in calibration, 4-corner adjustment,data-protection, data-inquiry,statistics, malfunction-checkout,etc..The whole weighing system is safe and reliable without any indicator.,

数字传感器

Digital Load Cell

1、传感器的性能参数采用数字化误差补偿技术和高度集成化电子元件，用软件实现传感器的线性、零点、额定输出温漂、蠕变等性能参数的综合补偿，消除了人为因素对补偿的影响，大大提高了传感器综合精度和可靠性。
2、传感器的输出一致性误差达到0.02%以内，甚至更高，批量制作时传感器特性参数可完全相同，因而具有良好的互换性。
3、因采用A/D转换电路、数字化信号传输和数字滤波技术，传感器的信号传输距离可达1200m，抗干扰能力增强，提高了传感器的稳定性。
4、传感器能自动采集数据并可预处理、存储和记忆，具有唯一标记，便于故障诊断。
5、传感器采用标准的数字通讯接口，直接连入计算机，也可与标准工业控制总线连接，组秤方便灵活。

1、Digital error compensation technology and high compositive electric components are applicated in the capability parameters of load cells Managing software is used for the integrated compensation of Linearity Zero TC SPAN and Creep etc. Eliminating the influence of the human factors to the compensation greatly improves the precision and reliability
2、Output consistency error of the load cell is within 0.02%. Keep the same parameter for the mass production，excellent interchange ability.
3、Application of the A/D converting circuit. digital signal transmissiom and digital wavefilter technology improving the signal transmission distance up to 1200m enhancing the ability of anti disturbance and good stability.
4、Automatic data collection， pre-disposal and memory having exclusive mark for easy trouble shooting..
5、Adopting standard digital communication connector can be connected to PC directly or standard industrial control line，assembly easily.

ZSNC-D20-50t

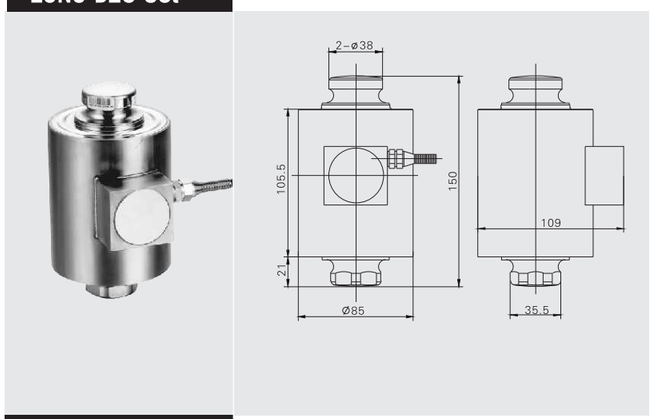

ZSF-D10-50t

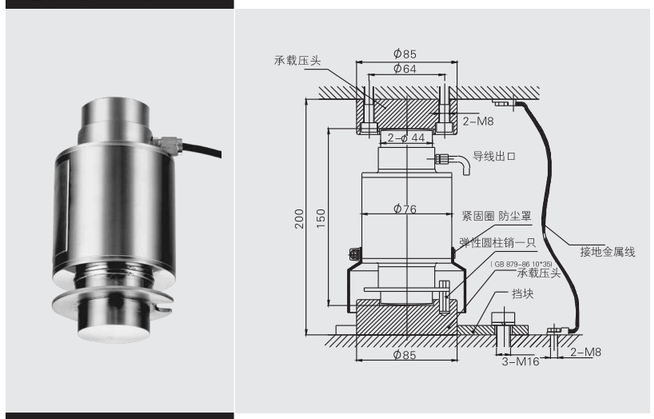

ZSGB-D10-30t

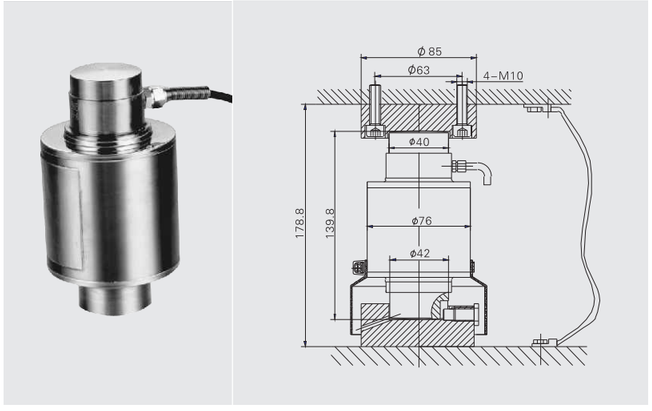

TECHNICAL PARAMETER

数据刷新速率Data refresh frequency:	50Hz
通讯波特率Communication baud rate:	9600BPS
综合精度Accuracy:	±0.02%F.S
蠕变Creep（30min）:	±0.02%F.S
温度系数Temperature coefficient:	±0.02%F.S/10℃
使用温度范围Temperature range,operating:	-30~+70℃
零点输出 Zero balance :	±0.1%F.S
安全过载 Safe overload:	150%F.S
防护等级 Protection class:	IP68
推荐输入电压Recommended input voltage:	9~12VDC
最大输入电压Max input voltage:	20VDC
最大信号传输距离Max signal transmission distance:	1200m

ZSNC-D

额定载荷Rated load:	20，25，30，40，50t
额定输出Rated Output:	20000,25000,30000,40000,50000码

ZSF-D10-50t

额定载荷Rated load:	10，15，20 / 25，30，40，50t
额定输出Rated Output:	20000 / 25000,30000,40000, 50000码

ZSGB-D10-30t

额定载荷Rated load:	10，15，20 / 25，30t
额定输出Rated Output:	20000 / 25000,30000码

接线图
Wiring Diagram

数字传感器系列 Digital load cell seriesl QS-D10-40tL QS-D10-40t H,M QS-D50t H,M

QS-D10-40tL

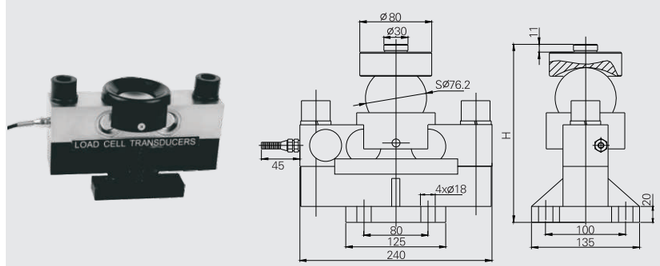

额定载荷(t) Rated load	10~30	40
H(mm)	224.7	230.7

TECHNICAL PARAMETER

数据刷新速率Data refresh frequency:	50HZ
通讯波特率Communication baud rate:	9600BPS
综合精度Total Error:	±0.02%F.S
蠕变Creep error（30min）:	±0.02%F.S
温度系数Temperature effect sensitivity:	±0.02%F.S/10℃
使用温度范围Temperature range:	-30~+70℃
零点输出 Zero balance :	±0.1%F.S
安全过载 Safe overload:	150%F.S
防护等级Protection class:	IP68
推荐输入电压Recommended input voltage:	9~12VDC
最大输入电压Max input voltage:	20VDC
最大信号传输距离Max signal transmission distance:	1200m

QS-D10-40tL

额定载荷Rated load:	10，15，20 / 25，30，40t
额定输出Rated Output:	20000 25000,30000,40000码

QS-D10-50tH QS-D10-50tM

额定载荷Rated load:	10，15，20 / 25，30，40，50t
额定输出Rated Output:	20000 25000,30000,40000, 50000

接线图
Wiring Diagram

QS-D50t H,M

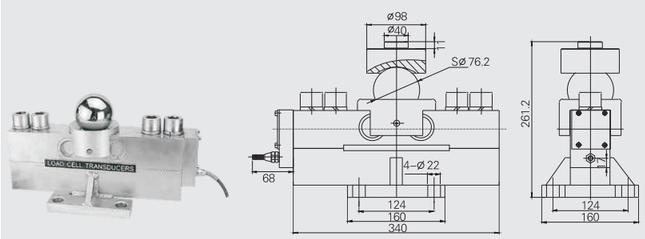

QS-D10-40t H,M

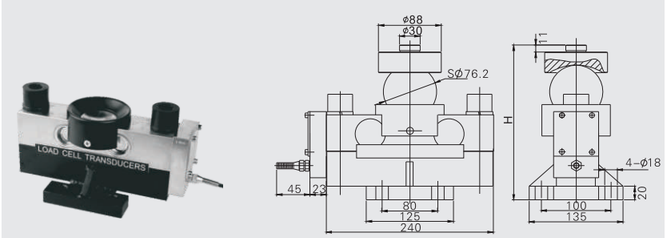

额定载荷（t） Rated load	H(mm)
10，15，20，25，30	224.7
40	230.7

QS/QS-A/-ASS Loadcell

QS/QS-A/-ASS

OIML

5~40t

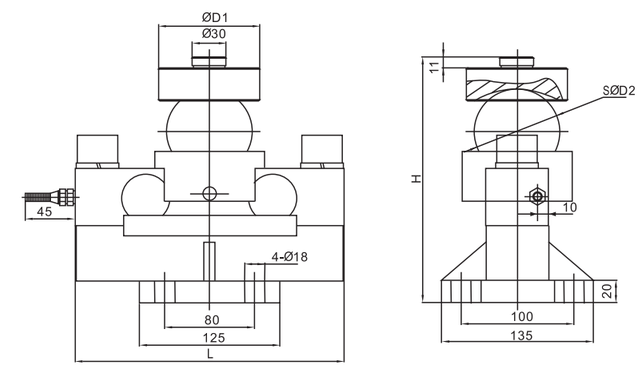

额定载荷(t) Rated Load	5	10,15,20,25,30	40
D1	68	85~88	88
D2	50.8	76.2	76.2
H	168.8	224.7	230.7
L	224	240	240

50t

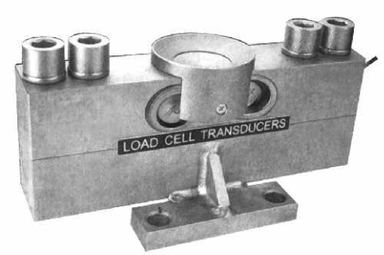

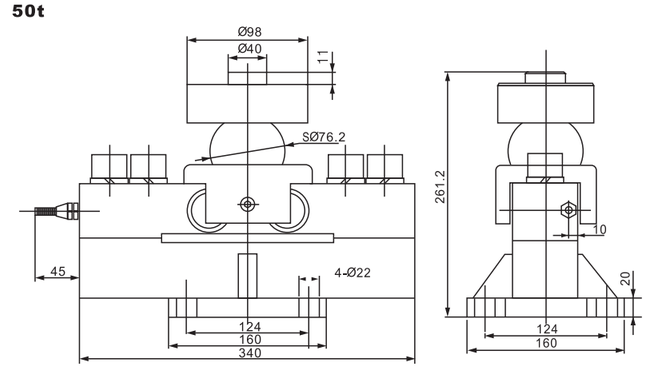

汽车衡、轨道衡、配料秤及各种专用衡器
Truck scale,railway scale,blending scale and special scale

TECHNICAL PARAMETER| 4Wires:Exc+(红,Red);Exc-(黑,Black);Sig+(绿,Green);Sig-(白,White)

额定载荷 Rated capacities(Emax)	5,10,15,20,25,30,40,50t	温度补偿范围 Temperature range, compensated	-10℃~+40℃
灵敏度 Sensitivity	2.0±0.002mV/V	工作温度范围 Temperature range, operating	-30~+70℃
精度等级 Accuracy class	C1~C5	安全过载 Maximum safe overload	150,120(40~50t)%F.S
		极限过载 Ultimate overload	300,200(40~50t)%F.S
零点平衡 Zero balance	±1%F.S	推荐激励电压 Excitation,recommend	10~12V DC
零点温度影响 TCO	±0.02%F.S/10℃	最大激励电压 Excitation,maximum	15V DC
输出温度影响 TC SPAN	±0.02%F.S/10℃	防封等级 Protection class	IP67(5t),IP68(10~50t)
输入阻抗 Input impedance	750±10Ω	材质 Construction	合金钢Alloy Steel 不锈钢Stainless Steel
输出阻抗 Output impedance	702±3Ω,703±5Ω(L≥15m)	电缆 Cable	Length=L:5.2m(5t),8m(10t),10m(15t),10/12m(20t);
绝缘电阻 Insulation impedance	≥5000MΩ		12/15m(25t),12/16m(30t),16m(40~50t) Diameter: Φ6mm

QSB-A/-ASS Loadcell

QSB-A/-ASS

OIML

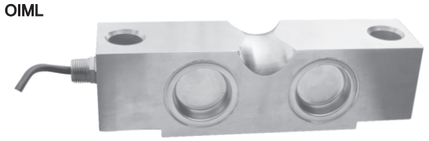

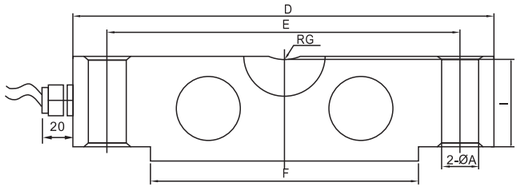

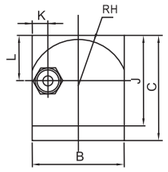

额定载荷(klb) Rated Load	A	B	C	D	E	F	G	H	I	J	K	L
10-25	17.3	42.9	49.3	196.9	165.1	125.1	19.1	22.9	41.4	43.2	8.8	13.6
40	20.6	49.3	62.0	260.4	215.9	162.4	25.4	28.5	50.8	53.3	10	31.0
50-75	27.0	62.0	74.7	260.4	215.9	162.4	25.4	34.8	64.5	67.3	10	37.4

汽车衡、轨道衡、轴重秤、地上衡、仓储秤等
Truck scale,railway scale, axle-load scale,floor scale,warehouse scale

TECHNICAL PARAMETER| 4Wires:Exc+(红,Red);Exc-(黑,Black);Sig+(绿,Green);Sig-(白,White)

额定载荷 Rated capacities(Emax)	10,20,25,40,50,60,65,75klb; 5,10,11,15t	温度补偿范围 Temperature range, compensated	–10℃~+40℃
灵敏度 Sensitivity	3.0±0.003mV/V	工作温度范围 Temperature range, operating	-30~+70℃
精度等级 Accuracy class	C2~C5	安全过载 Maximum safe overload	150%F.S
		极限过载 Ultimate overload	250%F.S
零点平衡 Zero balance	±1%F.S	推荐激励电压 Excitation,recommend	10~12V DC
零点温度影响 TCO	±0.02%F.S/10℃	最大激励电压 Excitation,maximum	15V DC
输出温度影响 TC SPAN	±0.02%F.S/10℃	防封等级 Protection class	IP68
输入阻抗 Input impedance	750±10Ω	材质 Construction	合金钢Alloy Steel 不锈钢Stainless Steel
输出阻抗 Output impedance	702±3Ω,702±5Ω(L≥15m)	电缆 Cable	
绝缘电阻 Insulation impedance	≥5000MΩ	Length=12m(10~40klb,5~15t),16m(50~75klb)	Diameter: φ6mm

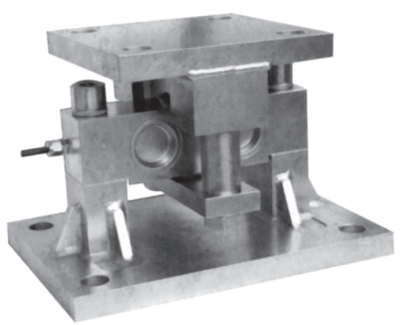

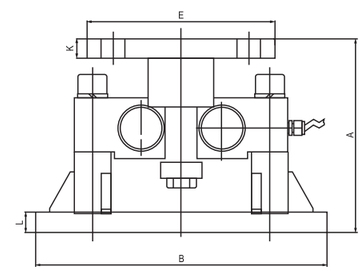

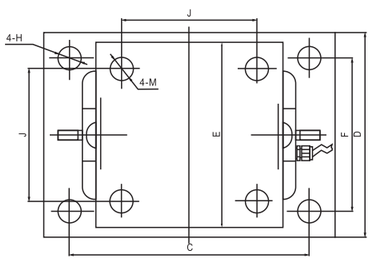

额定载荷(klb) Rated Load	A	B	C	D	E	F	H	J	K	L	M
10-25	168	254.0	190.5	203.0	203.0	152.0	20	152.0	19.0	19.0	20
40	198	355.6	292.1	254.0	203.0	190.5	28.5	152.0	19.0	25.4	20
50-75	241.3	355.6	292.1	254.0	228.6	190.5	28.5	165.0	25.4	25.4	28.5

QSC-A/-ASS Loadcell

QSC-A/-ASS

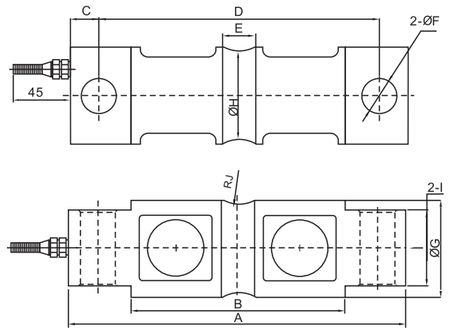

(inch)

额定载荷(klb) Rated Load	A	B	C	D	E	F	G	H	I	J
5-10	8.12	5.24	0.62	6.88	0.62	0.66	1.70	1.48	1.12	0.5
20-25	8.12	5.24	0.62	6.88	0.84	0.66	1.95	1.48	1.12	0.5
30-75	10.25	6.48	0.88	8.50	1.00	1.06	3.00	2.73	2.37	1.0
100	10.25	7.48	0.88	9.50	1.00	1.06	3.5	2.50	2.50	1.0

汽车衡、轨道衡、轴重秤、地上衡、仓储秤等
Truck scale,railway scale, axle-load scale,floor scale,warehouse scale

TECHNICAL PARAMETER| 4Wires:Exc+(红,Red);Exc-(黑,Black);Sig+(绿,Green);Sig-(白,White)

额定载荷 Rated capacities(Emax)	5,10,20,25,30,50,60,75,100klb; 20t	温度补偿范围 Temperature range, compensated	–10℃~+40℃
灵敏度 Sensitivity	3.0±0.003mV/V; 2.0±0.002mV/V(20t)	工作温度范围 Temperature range, operating	-30~+70℃
综合误差 Total error	±0.03%F.S;±0.05%F.S	安全过载 Maximum safe overload	150%F.S
蠕变(30分钟)Creep error (30min)	±0.02%F.S	极限过载 Ultimate overload	250%F.S
零点平衡 Zero balance	±1%F.S	推荐激励电压 Excitation,recommend	10~12V DC
零点温度影响 TCO	±0.02%F.S/10℃	最大激励电压 Excitation,maximum	15V DC
输出温度影响 TC SPAN	±0.02%F.S/10℃	防封等级 Protection class	IP68
输入阻抗 Input impedance	750±10Ω	材质 Construction	合金钢Alloy Steel 不锈钢Stainless Steel
输出阻抗 Output impedance	702±3Ω;703±5Ω(L≥15m)	电缆 Cable	Length=L:8m(5,10klb),12m(20~75klb,20t),16m(100klb)
绝缘电阻 Insulation impedance	≥5000MΩ		Diameter: φ5mm(5~10klb), φ6mm(20~100klb)

QSE-A/-ASS Loadcell

QSE-A/-ASS

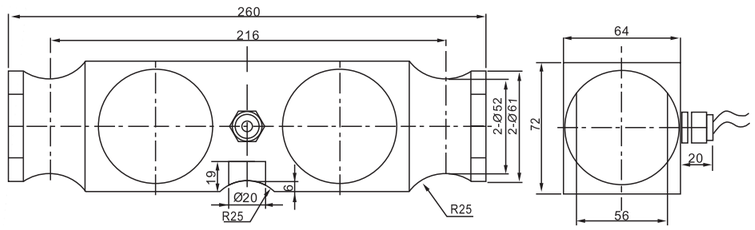

汽车衡、轨道衡、轴重秤、地上衡、仓储秤等
Truck scale,railway scale, axle-load scale,floor scale,warehouse scale

TECHNICAL PARAMETER| 4Wires:Exc+(红,Red);Exc-(黑,Black);Sig+(绿,Green);Sig-(白,White)

额定载荷 Rated capacities(Emax)	30,50,60,75klb	温度补偿范围 Temperature range, compensated	–10℃~+40℃
灵敏度 Sensitivity	3.0±0.003mV/V	工作温度范围 Temperature range, operating	-30 ~+70℃
综合误差 Total error	±0.03%F.S;±0.05%F.S	安全过载 Maximum safe overload	150 %F.S
蠕变(30分钟)Creep error (30min)	±0.02%F.S	极限过载 Ultimate overload	250 %F.S
零点平衡 Zero balance	±1%F.S	推荐激励电压 Excitation,recommend	1 0~12V DC
零点温度影响 TCO	±0.02%F.S/10℃	最大激励电压 Excitation,maximum	15V DC
输出温度影响 TC SPAN	±0.02%F.S/10℃	防封等级 Protection class	IP68
输入阻抗 Input impedance	750±10Ω	材质 Construction	合金钢Alloy Steel 不锈钢Stainless Steel
输出阻抗 Output impedance	702±3Ω	电缆 Cable	
绝缘电阻 Insulation impedance	≥5000MΩ	Length:12m	Diameter: φ6mm

QSEB-A/-ASS Loadcell

QSEB-A/-ASS

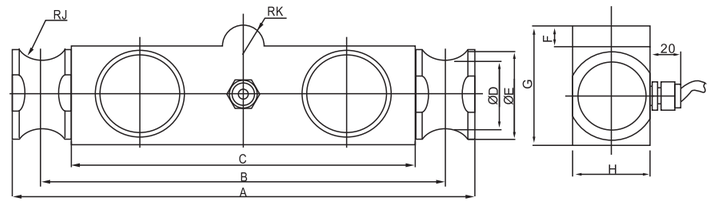

汽车衡、轨道衡、轴重秤、地上衡、仓储秤等
Truck scale,railway scale,axle -load scale,
floor scale,warehouse scale

额定载荷(klb) Rated Load	A	B	C	D	E	F	G	H	J	K
25,40,50	210	185	159	41	51	13	64	51	13	13
60,75	292	254	216	43	56	13	76	51	21	13
100,125	368	317	267	62	81	21	99	74	25	38

TECHNICAL PARAMETER| 4Wires:Exc+(红,Red);Exc-(黑,Black);Sig+(绿,Green);Sig-(白,White)

额定载荷 Rated capacities(Emax)	25,40,50,60,75,100,125klb	温度补偿范围 Temperature range, compensated	–10℃~+40℃
灵敏度 Sensitivity	3.0±0.003mV/V	工作温度范围 Temperature range, operating	-30~+70℃
综合误差 Total error	±0.03%F.S;±0.05%F.S	安全过载 Maximum safe overload	150%F.S
蠕变(30分钟)Creep error (30min)	±0.02%F.S	极限过载 Ultimate overload	250%F.S
零点平衡 Zero balance	±1%F.S	推荐激励电压 Excitation,recommend	10~12V DC
零点温度影响 TCO	±0.02%F.S/10℃	最大激励电压 Excitation,maximum	15V DC
输出温度影响 TC SPAN	±0.02%F.S/10℃	防封等级 Protection class	IP68
输入阻抗 Input impedance	750±10Ω	材质 Construction	合金钢Alloy Steel 不锈钢Stainless Steel
输出阻抗 Output impedance	702±3Ω	电缆 Cable	Length:12m(25~50klb),(60~125klb)
绝缘电阻 Insulation impedance	≥5000MΩ		Diameter: φ6mm

QSEC-A/-ASS Loadcell

QSEC-A/-ASS

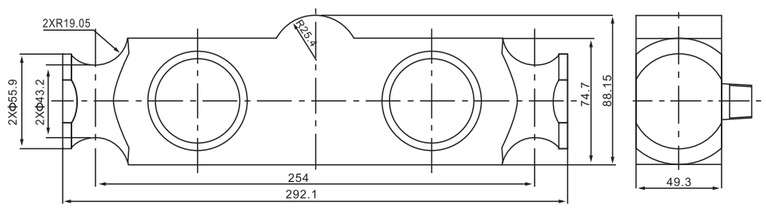

汽车衡
Truck scale

TECHNICAL PARAMETER| 4Wires:Exc+(红,Red);Exc-(黑,Black);Sig+(绿,Green);Sig-(白,White)

额定载荷 Rated capacities(Emax)	50,60,75klb	温度补偿范围 Temperature range, compensated	–10℃~+40℃
灵敏度 Sensitivity	3.0±0.003mV/V	工作温度范围 Temperature range, operating	-30~+70℃
综合误差 Total error	±0.03%F.S;±0.05%F.S	安全过载 Maximum safe overload	120%F.S
蠕变(30分钟)Creep error (30min)	±0.02%F.S	极限过载 Ultimate overload	200%F.S
零点平衡 Zero balance	±1%F.S	推荐激励电压 Excitation,recommend	10~12V DC
零点温度影响 TCO	±0.02%F.S/10℃	最大激励电压 Excitation,maximum	15V DC
输出温度影响 TC SPAN	±0.02%F.S/10℃	防封等级 Protection class	IP68
输入阻抗 Input impedance	750±10Ω	材质 Construction	Alloy Steel 不锈钢Stainless Steel
输出阻抗 Output impedance	702±3Ω	电缆 Cable	Length:15.5m
绝缘电阻 Insulation impedance	≥5000MΩ		Diameter: φ6mm

QSF-A/-ASS Loadcell

QSF-A/-ASS

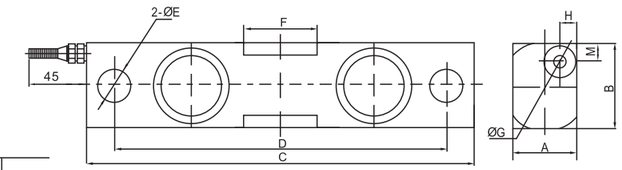

额定载荷(klb) Rated Load	A	B	C	D	E	F	G	H	M
2-5	31	31	190.5	159.1	12.7	30.5	31.5	8	6.5
10-35	36.6	48.5	222	190.5	19	42	50.6	10	9.5

汽车衡、轨道衡、轴重秤、地上衡、仓储秤等
Truck scale,railway scale, axle-load scale, floor scale,warehouse scale

TECHNICAL PARAMETER| 4Wires:Exc+(红,Red);Exc-(黑,Black);Sig+(绿,Green);Sig-(白,White)

额定载荷 Rated capacities(Emax)	2,2.5,3,5,10,25,35klb	温度补偿范围 Temperature range, compensated	–10℃~+40℃
灵敏度 Sensitivity	3.0±0.005mV/V	工作温度范围 Temperature range, operating	-30~+70℃
综合误差 Total error	±0.03%F.S;±0.05%F.S;±0.1%F.S(不锈钢Stainless Steel)	安全过载 Maximum safe overload	150%F.S
蠕变(30分钟)Creep error (30min)	±0.02%F.S	极限过载 Ultimate overload	250%F.S
零点平衡 Zero balance	±1%F.S	推荐激励电压 Excitation,recommend	10~12V DC
零点温度影响 TCO	±0.02%F.S/10℃	最大激励电压 Excitation,maximum	15V DC
输出温度影响 TC SPAN	±0.02%F.S/10℃	防封等级 Protection class	IP68
输入阻抗 Input impedance	750±10Ω	材质 Construction	合金钢Alloy Steel 不锈钢Stainless Steel
输出阻抗 Output impedance	702±3Ω	电缆 Cable	Length=6m(2~5klb),10m(10~35klb)
绝缘电阻 Insulation impedance	≥5000MΩ		Diameter: φ5mm(2~5klb), φ6mm(10~35klb)

QSFB-A Loadcell

QSFB-A

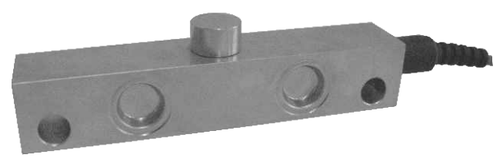

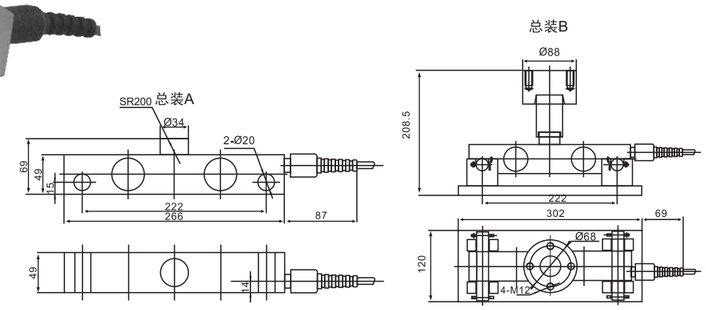

汽车衡
Truck scale

TECHNICAL PARAMETER| 6Wires:Exc+(红,Red);Exc-(黑,Black);Sig+(绿,Green);Sig-(白,White);Sen+(蓝,Blue);Sen-(黄,Yellow)

额定载荷 Rated capacities(Emax)	20t	温度补偿范围 Temperature range, compensated	–10℃~+40℃
灵敏度 Sensitivity	2.0±0.003mV/V	工作温度范围 Temperature range, operating	-30~+70℃
综合误差 Total error	±0.05%F.S	安全过载 Maximum safe overload	150%F.S
蠕变(30分钟)Creep error (30min)	±0.03%F.S	极限过载 Ultimate overload	250%F.S
零点平衡 Zero balance	±1%F.S	推荐激励电压 Excitation,recommend	10~12V DC
零点温度影响 TCO	±0.02%F.S/10℃	最大激励电压 Excitation,maximum	15V DC
输出温度影响 TC SPAN	±0.02%F.S/10℃	防封等级 Protection class	IP68
输入阻抗 Input impedance	750±10Ω	材质 Construction	合金钢Alloy Steel
输出阻抗 Output impedance	702±3Ω	电缆 Cable	Length:8m
绝缘电阻 Insulation impedance	≥5000MΩ		Diameter: φ8mm

QSN–A Loadcell

QSN–A

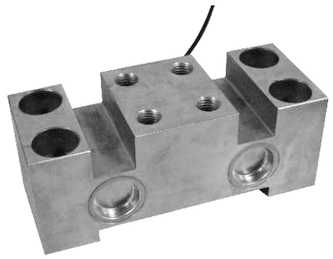

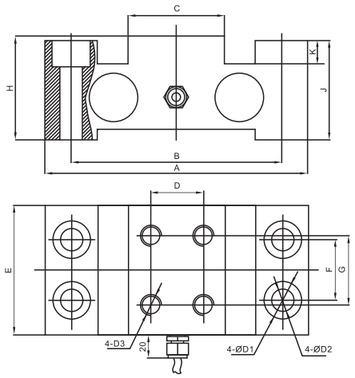

钢包秤、天车秤
Steel embody scale,overhead crane scale

额定载荷(t) Rated Load	A	B	C	D	E	F	G	H	J	K	D1	D2	D3
10	200	170	85	60	80	50	50	60	50	7	26	18	M16
20,30	300	240	110	60	120	70	70	120	115	28	43	26	M24
40,50	300	240	110	60	150	70	80	120	115	30.5	43	26	M24

TECHNICAL PARAMETER| 4Wires:Exc+(红,Red);Exc-(黑,Black);Sig+(绿,Green);Sig-(白,White)

额定载荷 Rated capacities(Emax)	10,20,30,40,50t	温度补偿范围 Temperature range, compensated	–10℃~+40℃
灵敏度 Sensitivity	1.8±0.005mV/V(10t);2.0±0.005mV/V(20t);1.2±0.005mV/V(30t);1.8±0.005mV/V(40~50t)	工作温度范围 Temperature range, operating	-30~+70℃
综合误差 Total error	±0.2%F.S	安全过载 Maximum safe overload	150%F.S
蠕变(30分钟)Creep error (30min)	±0.03%F.S	极限过载 Ultimate overload	300%F.S
零点平衡 Zero balance	±1%F.S	推荐激励电压 Excitation,recommend	10~12V DC
零点温度影响 TCO	±0.02%F.S/10℃	最大激励电压 Excitation,maximum	15V DC
输出温度影响 TC SPAN	±0.02%F.S/10℃	防封等级 Protection class	IP68
输入阻抗 Input impedance	750±10Ω	材质 Construction	合金钢Alloy Steel
输出阻抗 Output impedance	702±3Ω,703±5Ω(L≥15m)	电缆 Cable	Length=L:12m(10t),14m(20~30t),16m(40,50t)
绝缘电阻 Insulation impedance	≥5000MΩ		Diameter: φ6mm

QSNB–A Loadcell

QSNB–A

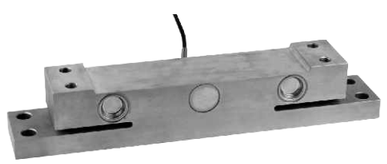

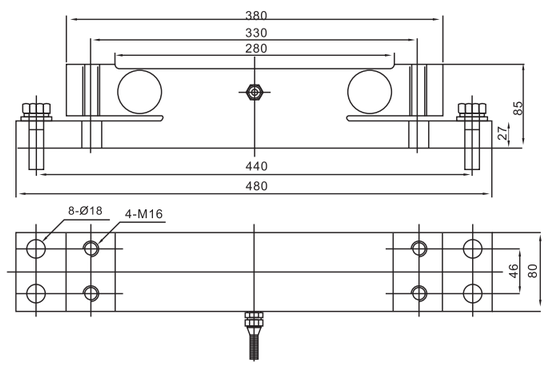

竖井计量
Shaft measurement

TECHNICAL PARAMETER| 4Wires:Exc+(红,Red);Exc-(黑,Black);Sig+(绿,Green);Sig-(白,White)

额定载荷 Rated capacities(Emax)	10,15,20,25,30t	温度补偿范围 Temperature range, compensated	–10℃~+40℃
灵敏度 Sensitivity	2.0±0.005mV/V	工作温度范围 Temperature range, operating	-30~+70℃
综合误差 Total error	±0.1%F.S	安全过载 Maximum safe overload	120%F.S
蠕变(30分钟)Creep error (30min)	±0.05%F.S	极限过载 Ultimate overload	150%F.S
零点平衡 Zero balance	±1%F.S	推荐激励电压 Excitation,recommend	10~12V DC
零点温度影响 TCO	±0.02%F.S/10℃	最大激励电压 Excitation,maximum	15V DC
输出温度影响 TC SPAN	±0.02%F.S/10℃	防封等级 Protection class	IP67
输入阻抗 Input impedance	750±10Ω	材质 Construction	合金钢Alloy Steel
输出阻抗 Output impedance	702±3Ω	电缆 Cable	Length:5m
绝缘电阻 Insulation impedance	≥5000MΩ		Diameter: φ6mm

QSJ/QSJ–A/SS Loadcell

QSJ/QSJ–A/SS

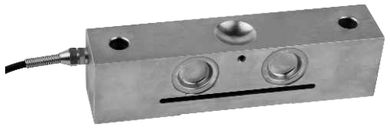

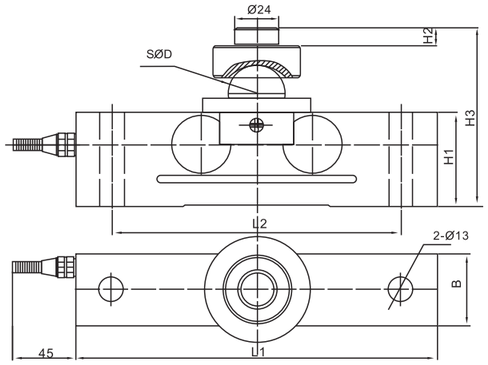

额定载荷(t) Rated Load	L1	L2	B	H1	H2	H3	D
0.5	180	150	37	43	10	85.4	φ25.4
2,3	200	160	40	52	10	99.75	φ31.75

专用衡器
special scale

TECHNICAL PARAMETER| 4Wires:Exc+(红,Red);Exc-(黑,Black);Sig+(绿,Green);Sig-(白,White)

额定载荷 Rated capacities(Emax)	0.5,2,3t	温度补偿范围 Temperature range, compensated	–10℃~+40℃
灵敏度 Sensitivity	2.0±0.002mV/V	工作温度范围 Temperature range, operating	-30~+70℃
综合误差 Total error	±0.05%F.S	安全过载 Maximum safe overload	150%F.S
蠕变(30分钟)Creep error (30min)	±0.03%F.S	极限过载 Ultimate overload	300%F.S
零点平衡 Zero balance	±1%F.S	推荐激励电压 Excitation,recommend	10~12V DC
零点温度影响 TCO	±0.02%F.S/10℃	最大激励电压 Excitation,maximum	15V DC
输出温度影响 TC SPAN	±0.02%F.S/10℃	防封等级 Protection class	IP67(0.5t),IP68(2,3t)
输入阻抗 Input impedance	750±10Ω	材质 Construction	合金钢Alloy Steel 不锈钢Stainless Steel
输出阻抗 Output impedance	702±3Ω	电缆 Cable	Length:4m
绝缘电阻 Insulation impedance	≥5000MΩ		Diameter: φ5mm

QSK–A Loadcell

QSK-A

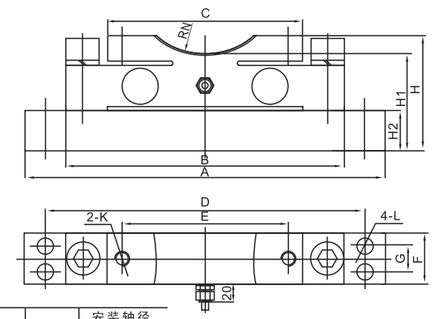

钢包秤、天车秤
Steel embody scale,overhead crane scale

额定载荷(t) Rated Load	A	B	C	D	E	F	G	H	H1	H2	K	L	RN	安装轴径 Install axle diameter
10,15,20,30	390	300	210	345	180	56	29	127	107	45	M16	φ18	R80	φ60~φ150
40,50,60	500	395	235	445	200	86	45	173	153	67	M20	φ22	R90	φ80~φ170

TECHNICAL PARAMETER| 4Wires:Exc+(红,Red);Exc-(黑,Black);Sig+(绿,Green);Sig-(白,White)

额定载荷 Rated capacities(Emax)	10,15,20,30,40,50,60t	温度补偿范围 Temperature range, compensated	–10℃~+40℃
灵敏度 Sensitivity	2.0±0.01mV/V(10~30t);1.5±0.01mV/V(40~60t)	工作温度范围 Temperature range, operating	-30~+70℃
综合误差 Total error	±0.05%F.S(10~30t);±0.1%F.S(40~60t)	安全过载 Maximum safe overload	150%F.S
蠕变(30分钟)Creep error (30min)	±0.03%F.S	极限过载 Ultimate overload	300%F.S
零点平衡 Zero balance	±1%F.S	推荐激励电压 Excitation,recommend	10~12V DC
零点温度影响 TCO	±0.02%F.S/10℃	最大激励电压 Excitation,maximum	15V DC
输出温度影响 TC SPAN	±0.02%F.S/10℃	防封等级 Protection class	IP68
输入阻抗 Input impedance	750±10Ω	材质 Construction	合金钢Alloy Steel
输出阻抗 Output impedance	702±3Ω,702±5Ω(L≥15m)	电缆 Cable	Length=L:8m(10t),10m(15t),12m(20t),16m(30~60t)
绝缘电阻 Insulation impedance	≥5000MΩ		Diameter: φ6mm

QSP-A Loadcell

QSP-A

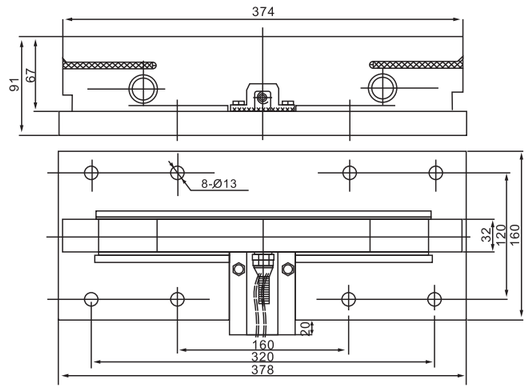

轻轨轨道衡
Light railway scale

TECHNICAL PARAMETER| 4Wires:Exc+(红,Red);Exc-(黑,Black);Sig+(绿,Green);Sig-(白,White)

额定载荷 Rated capacities(Emax)	5t	温度补偿范围 Temperature range, compensated	–10℃~+40℃
灵敏度 Sensitivity	2.5±0.005mV/V	工作温度范围 Temperature range, operating	-30~+70℃
综合误差 Total error	±0.1%F.S	安全过载 Maximum safe overload	150%F.S
蠕变(30分钟)Creep error (30min)	±0.05%F.S	极限过载 Ultimate overload	200%F.S
零点平衡 Zero balance	±1%F.S	推荐激励电压 Excitation,recommend	10~12V DC
零点温度影响 TCO	±0.03%F.S/10℃	最大激励电压 Excitation,maximum	15V DC
输出温度影响 TC SPAN	±0.03%F.S/10℃	防封等级 Protection class	IP68
输入阻抗 Input impedance	750±10Ω	材质 Construction	合金钢Alloy Steel
输出阻抗 Output impedance	702±3Ω	电缆 Cable	Length:3.1m
绝缘电阻 Insulation impedance	≥5000MΩ		Diameter: φ6mm

QSPG-A Loadcell

QSPG-A

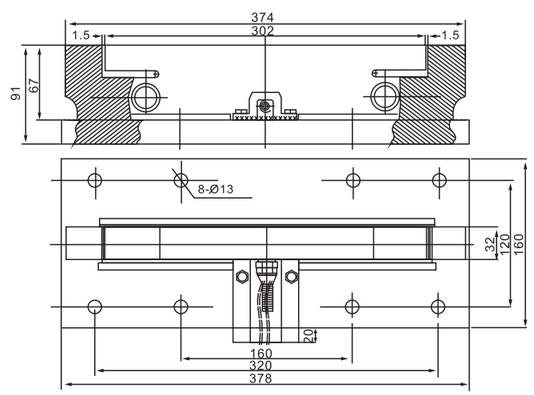

轻轨轨道衡
Light railway scale

TECHNICAL PARAMETER| 4Wires:Exc+(红,Red);Exc-(黑,Black);Sig+(绿,Green);Sig-(白,White)

额定载荷 Rated capacities(Emax)	5t	温度补偿范围 Temperature range, compensated	–10℃~+40℃
灵敏度 Sensitivity	2.5±0.005mV/V	工作温度范围 Temperature range, operating	-30~+70℃
综合误差 Total error	±0.05%F.S	安全过载 Maximum safe overload	150%F.S
蠕变(30分钟)Creep error (30min)	±0.05%F.S	极限过载 Ultimate overload	200%F.S
零点平衡 Zero balance	±1%F.S	推荐激励电压 Excitation,recommend	10~12V DC
零点温度影响 TCO	±0.02%F.S/10℃	最大激励电压 Excitation,maximum	15V DC
输出温度影响 TC SPAN	±0.02%F.S/10℃	防封等级 Protection class	IP68
输入阻抗 Input impedance	750±10Ω	材质 Construction	合金钢Alloy Steel
输出阻抗 Output impedance	702±3Ω	电缆 Cable	Length:3.1m
绝缘电阻 Insulation impedance	≥5000MΩ		Diameter: φ6mm

QSG-A Loadcell

QSG-A

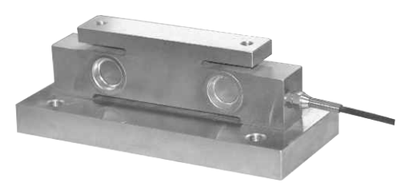

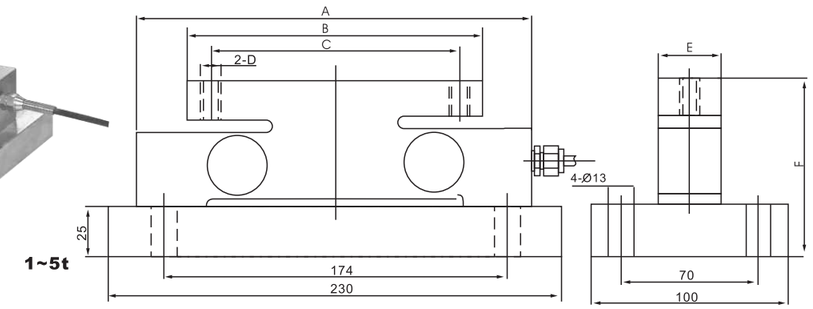

额定载荷(t) Rated Load	A	B	C	D	E	F
1-2	200	150	126	M10	32	83
3-5	220	140	110	M16	45	114

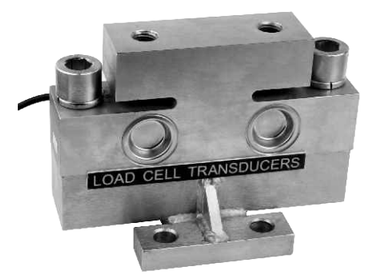

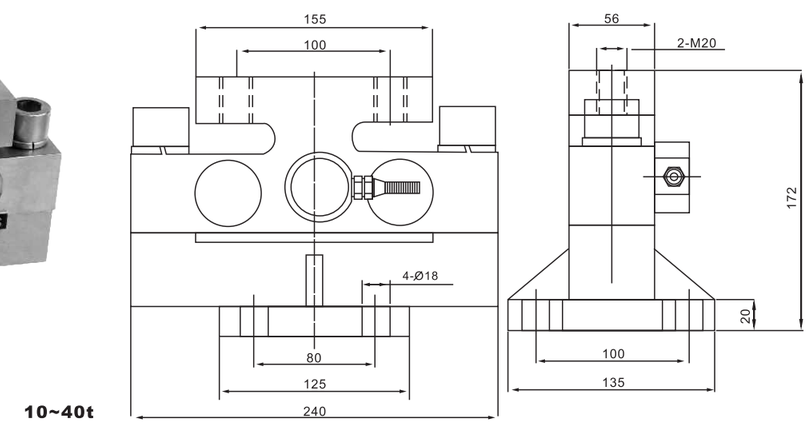

钢包秤、罐装秤及各种起重机械
Steel embody scale,silo scale,every kinds of crane mechanism

TECHNICAL PARAMETER| 4Wires:Exc+(红,Red);Exc-(黑,Black);Sig+(绿,Green);Sig-(白,White)

额定载荷 Rated capacities(Emax)	1,2,3,5,10,15,20,25,30,40t	温度补偿范围 Temperature range, compensated	–10℃~+40℃
灵敏度 Sensitivity	2.0±0.01mV/V	工作温度范围 Temperature range, operating	-30~+70℃
综合误差 Total error	±0.2%F.S	安全过载 Maximum safe overload	150%F.S
蠕变(30分钟)Creep error (30min)	±0.03%F.S	极限过载 Ultimate overload	300%F.S
零点平衡 Zero balance	±1%F.S	推荐激励电压 Excitation,recommend	10~12V DC
零点温度影响 TCO	±0.02%F.S/10℃	最大激励电压 Excitation,maximum	15V DC
输出温度影响 TC SPAN	±0.02%F.S/10℃	防封等级 Protection class	IP68
输入阻抗 Input impedance	750±10Ω	材质 Construction	合金钢Alloy Steel
输出阻抗 Output impedance	702±3Ω	电缆 Cable	Length:8m(1~15t),10m(20t),12m(25t)14m(30,40t)
绝缘电阻 Insulation impedance	≥5000MΩ		Diameter: φ5mm(1~5t), φ6mm(10~40t)

QSMC Loadcell

QSMC

钢包秤
Steel embody scale

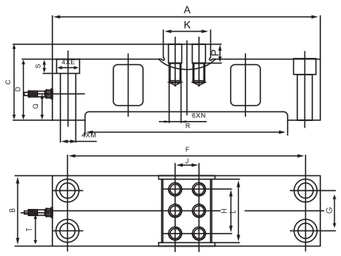

量程(t)	A	B	C	D	E	F	G	H	J	K	L	M	N	P	Q	R	S	T
50	450	120	130	105	φ38	398	68	75	40	80	110	φ26	M20↧30	32	45	340	25.5	57
100	500	140	143	118	φ44	444	80	90	44	90	130	φ30	M24↧36	38	54	370	28.5	62
150	560	160	158	133	φ48	500	94	102	44	90	150	φ33	M24↧36	38	66	410	32	69
200	620	180	175	150	φ48	560	114	110	44	90	160	φ33	M24↧40	40	75	450	32	76

TECHNICAL PARAMETER| 4Wires:Exc+(红,Red);Exc-(黑,Black);Sig+(绿,Green);Sig-(白,White)

额定载荷 Rated capacities(Emax)	50,100,150,200t	温度补偿范围 Temperature range, compensated	–10℃~+40℃
灵敏度 Sensitivity	2.0±0.003mV/V	工作温度范围 Temperature range, operating	-30~+70℃
综合误差 Total error	±0.1%F.S	安全过载 Maximum safe overload	120%F.S
蠕变(30分钟)Creep error (30min)	±0.05%F.S	极限过载 Ultimate overload	200%F.S
零点平衡 Zero balance	±1%F.S	推荐激励电压 Excitation,recommend	10~12V DC
零点温度影响 TCO	±0.02%F.S/10℃	最大激励电压 Excitation,maximum	15V DC
输出温度影响 TC SPAN	±0.02%F.S/10℃	防封等级 Protection class	IP67
输入阻抗 Input impedance	750±10Ω	材质 Construction	合金钢Alloy Steel
输出阻抗 Output impedance	702±3Ω	电缆 Cable	Length:16m
绝缘电阻 Insulation impedance	≥5000MΩ		Diameter: φ5mm

QS型ZCB Load cell

QS型ZCB

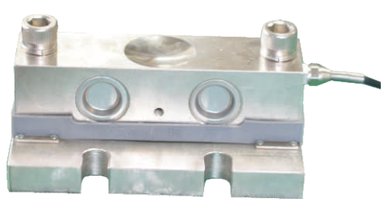

汽车衡
Truck scale

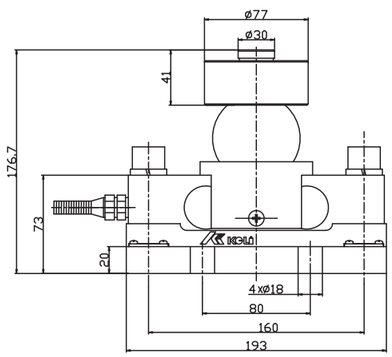

TECHNICAL PARAMETER| 4Wires:Exc+(红,Red);Exc-(黑,Black);Sig+(绿,Green);Sig-(白,White)

额定载荷 Rated capacities(Emax)	10，15，20，25，30t	温度补偿范围 Temperature range, compensated	–10~+40℃
灵敏度 Sensitivity	2.0±0.002mV/V	工作温度范围 Temperature range, operating	-30~+70℃
综合误差 Total error	±0.03%F.S	安全过载 Maximum safe overload	150%F.S
蠕变(30分钟)Creep error (30min)	±0.02%F.S	极限过载 Ultimate overload	300%F.S
零点平衡 Zero balance	±1%F.S	推荐激励电压 Excitation,recommend	10~12V DC
零点温度影响 TCO	±0.02%F.S/10℃	最大激励电压 Excitation,maximum	15V DC
输出温度影响 TC SPAN	±0.02%F.S/10℃	防护等级 Protection class	IP68
输入阻抗 Input impedance	750±10Ω	材质 Construction	合金钢Alloy Steel
输出阻抗 Output impedance	703±2Ω	电缆 Cable	
绝缘电阻 Insulation impedance	≥5000MΩ	Length: 12m，16m	Diameter: φ6mm

GG–A Loadcell

GG–A

钢轨型号	量程(t)	L1	L2	L3	B1	B2	B3	H1	H2	D
11kg/m	2	362	320	160	160	120	32	80.5	22	φ13
15kg/m	5~10	382	286	168	135	90	37	91	25	φ17
18kg/m	5~10	382	286	168	135	90	40	90	25	φ17
24kg/m	10~15	382	286	168	200	150	51	107	31	φ22
38kg/m	5~50	402	305	185	220	170	68	134	34	φ22
43kg/m	10~50	402	305	185	220	170	70	140	34	φ22
50kg/m	20~60	502	425	280	220	160	70	152	48	φ26
Qu100	40~60	452	350	200	260	200	108	150	48	φ28
Qu120	50~60	452	350	200	280	220	129	170	48	φ28

静态钢包秤、轨道衡、天车秤
Static steel embody scale,railway scale,overhead crane scale

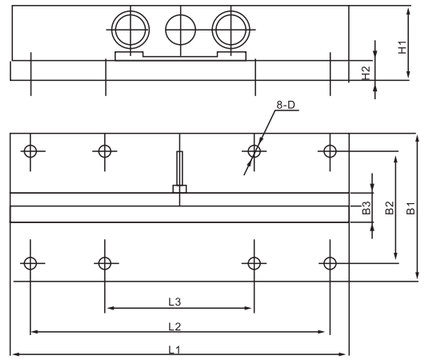

TECHNICAL PARAMETER| 4Wires:Exc+(红,Red);Exc-(黑,Black);Sig+(绿,Green);Sig-(白,White)

额定载荷 Rated capacities(Emax)	2,5,10,15,20,30,40,50,60t	温度补偿范围 Temperature range, compensated	–10℃~+40℃
灵敏度 Sensitivity	1.0±0.005mV/V(2~10t);1.5±0.005mV/V(15~60t)	工作温度范围 Temperature range, operating	-30~+70℃
综合误差 Total error	±0.1%F.S(2~20t);±0.2%F.S(30~60t)	安全过载 Maximum safe overload	150%F.S
蠕变(30分钟)Creep error (30min)	±0.05%F.S	极限过载 Ultimate overload	250%F.S
零点平衡 Zero balance	±1%F.S	推荐激励电压 Excitation,recommend	10~12V DC
零点温度影响 TCO	±0.05%F.S/10℃	最大激励电压 Excitation,maximum	15V DC
输出温度影响 TC SPAN	±0.05%F.S/10℃	防封等级 Protection class	IP68
输入阻抗 Input impedance	750±10Ω	材质 Construction	合金钢Alloy Steel
输出阻抗 Output impedance	702±3Ω	电缆 Cable	Length:20m
绝缘电阻 Insulation impedance	≥5000MΩ		Diameter: φ6mm

GGB(22)–A Loadcell

GGB(22)–A

静态轻轨轨道衡
Static light railway scale

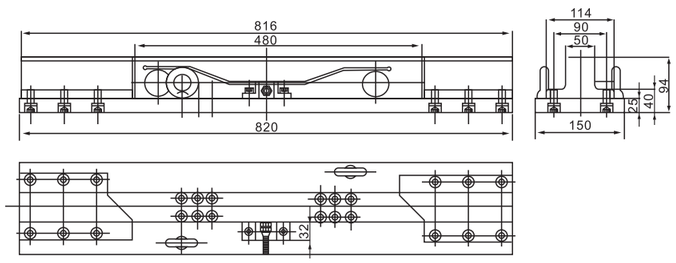

TECHNICAL PARAMETER| 4Wires:Exc+(红,Red);Exc-(黑,Black);Sig+(绿,Green);Sig-(白,White)

额定载荷 Rated capacities(Emax)	5t	温度补偿范围 Temperature range, compensated	–10℃~+40℃
灵敏度 Sensitivity	1.0± 0.01 mV/V	工作温度范围 Temperature range, operating	-30~+70℃
综合误差 Total error	±0.1%F.S	安全过载 Maximum safe overload	120%F.S
蠕变(30分钟)Creep error (30min)	±0.1%F.S	极限过载 Ultimate overload	150%F.S
零点平衡 Zero balance	±1%F.S	推荐激励电压 Excitation,recommend	10~12V DC
零点温度影响 TCO	±0.05%F.S/10℃	最大激励电压 Excitation,maximum	15V DC
输出温度影响 TC SPAN	±0.05%F.S/10℃	防封等级 Protection class	IP68
输入阻抗 Input impedance	750±10Ω	材质 Construction	合金钢Alloy Steel
输出阻抗 Output impedance	702±3Ω	电缆 Cable	Length:20m
绝缘电阻 Insulation impedance	≥5000MΩ		Diameter: φ6mm

GGF(22)-A Loadcell

GGF(22)-A

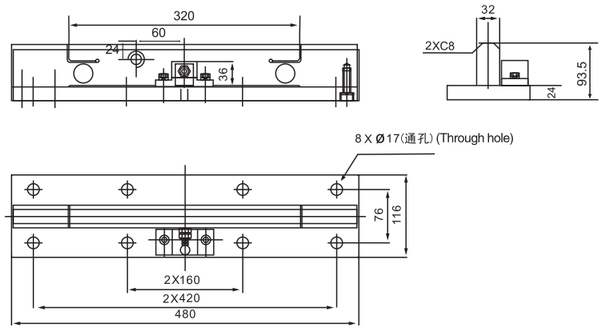

轻轨轨道衡
Light railway scale

TECHNICAL PARAMETER| 4Wires:Exc+(红,Red);Exc-(黑,Black);Sig+(绿,Green);Sig-(白,White)

额定载荷 Rated capacities(Emax)	2,2.5,3t	温度补偿范围 Temperature range, compensated	–10℃~+40℃
灵敏度 Sensitivity	2.0±0.01mV/V	工作温度范围 Temperature range, operating	-30~+70℃
综合误差 Total error	±0.1%F.S	安全过载 Maximum safe overload	150%F.S
蠕变(30分钟)Creep error (30min)	±0.05%F.S	极限过载 Ultimate overload	200%F.S
零点平衡 Zero balance	±1%F.S	推荐激励电压 Excitation,recommend	10~12V DC
零点温度影响 TCO	±0.02%F.S/10℃	最大激励电压 Excitation,maximum	15V DC
输出温度影响 TC SPAN	±0.02%F.S/10℃	防封等级 Protection class	IP68
输入阻抗 Input impedance	750±10Ω	材质 Construction	合金钢Alloy Steel
输出阻抗 Output impedance	702±3Ω	电缆 Cable	Length: 6m
绝缘电阻 Insulation impedance	≥5000MΩ		Diameter: ϕ6mm

BT-A Loadcell

BT-A

额定载荷(t) Rated Load	R	L1	L2	L3	H1	H2	B
10	40	77.5	110	140	115	145	54
15	50	100	130	160	110	180	54
20t安装方法Ⅰ	52.5	105	140	170	107.5	160	54
20t安装方法Ⅱ	60	120	150	180	115	175	54
20t安装方法Ⅲ	60	120	150	180	115	175	85

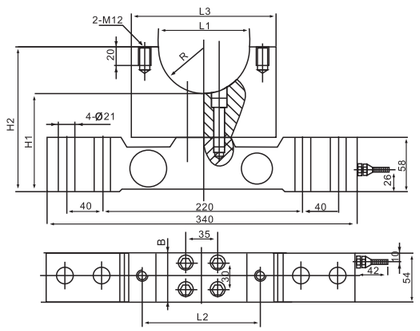

天车秤及各种专用衡器
Overhead crane scale,every kinds of special scale

TECHNICAL PARAMETER| 4Wires:Exc+(红,Red);Exc-(黑,Black);Sig+(绿,Green);Sig-(白,White)

额定载荷 Rated capacities(Emax)	10,15,20t	温度补偿范围 Temperature range, compensated	–10℃~+40℃
灵敏度 Sensitivity	2.0±0.002mV/V	工作温度范围 Temperature range, operating	-30~+70℃
综合误差 Total error	±0.05%F.S	安全过载 Maximum safe overload	150%F.S
蠕变(30分钟)Creep error (30min)	±0.02%F.S	极限过载 Ultimate overload	250%F.S
零点平衡 Zero balance	±1%F.S	推荐激励电压 Excitation,recommend	10~12V DC
零点温度影响 TCO	±0.02%F.S/10℃	最大激励电压 Excitation,maximum	15V DC
输出温度影响 TC SPAN	±0.02%F.S/10℃	防封等级 Protection class	IP68
输入阻抗 Input impedance	750±10Ω	材质 Construction	合金钢Alloy Steel
输出阻抗 Output impedance	702±3Ω	电缆 Cable	Length:12m
绝缘电阻 Insulation impedance	≥5000MΩ		Diameter: ϕ6mm

BTKB Loadcell

BTKB

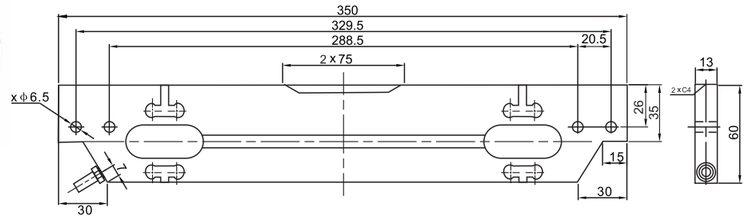

拉式测力装置、动物秤
Tension testing device,animal scales

TECHNICAL PARAMETER| 4Wires:Exc+(红,Red);Exc-(黑,Black);Sig+(绿,Green);Sig-(白,White)

额定载荷 Rated capacities(Emax)	600,800kg	温度补偿范围 Temperature range, compensated	–10℃~+40℃
灵敏度 Sensitivity	2.0±0.005mV/V	工作温度范围 Temperature range, operating	-30~+70℃
综合误差 Total error	±0.1%F.S	安全过载 Maximum safe overload	120%F.S
蠕变(30分钟)Creep error (30min)	±0.05%F.S	极限过载 Ultimate overload	200%F.S
零点平衡 Zero balance	±1%F.S	推荐激励电压 Excitation,recommend	10~12V DC
零点温度影响 TCO	±0.03%F.S/10℃	最大激励电压 Excitation,maximum	15V DC
输出温度影响 TC SPAN	±0.03%F.S/10℃	防封等级 Protection class	IP66
输入阻抗 Input impedance	760±10Ω	材质 Construction	合金钢Alloy Steel
输出阻抗 Output impedance	702±3Ω	电缆 Cable	Length:5
绝缘电阻 Insulation impedance	≥5000MΩ		Diameter: ϕ5mm

SCE-A/-ASS Loadcell

SCE-A/-ASS

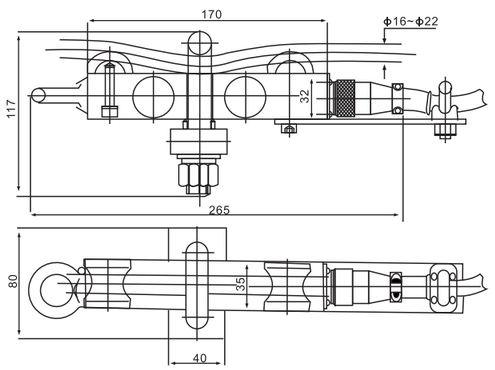

钢丝绳、过载报警场合及张力称重装置
Wire rope,overload alarming,every kinds of tension weigh device

TECHNICAL PARAMETER| 4Wires:Exc+(红,Red);Exc-(黑,Black);Sig+(绿,Green);Sig-(白,White)

额定载荷 Rated capacities(Emax)	3t	温度补偿范围 Temperature range, compensated	–10℃~+40℃
灵敏度 Sensitivity	2.0± 0.5 mV/V	工作温度范围 Temperature range, operating	-30~+70℃
综合误差 Total error	±0.3%F.S	安全过载 Maximum safe overload	150%F.S
蠕变(30分钟)Creep error (30min)	±0.3%F.S	极限过载 Ultimate overload	200%F.S
零点平衡 Zero balance	±1%F.S	推荐激励电压 Excitation,recommend	10~12V DC
零点温度影响 TCO	±0.05%F.S/10℃	最大激励电压 Excitation,maximum	15V DC
输出温度影响 TC SPAN	±0.05%F.S/10℃	防封等级 Protection class	IP67
输入阻抗 Input impedance	765± 5Ω	材质 Construction	合金钢Alloy Steel 不锈钢Stainless Steel
输出阻抗 Output impedance	702± 3Ω	电缆 Cable	Diameter: ϕ 11.5mm
绝缘电阻 Insulation impedance	≥5000MΩ		

SCEB-A Loadcell

SCEB-A

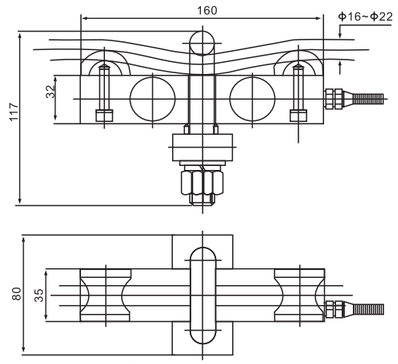

钢丝绳、过载报警场合及各种张力称重装置
Wire rope,overload alarming, all kinds of tension weigh device

TECHNICAL PARAMETER| 4Wires:Exc+(红,Red);Exc-(黑,Black);Sig+(绿,Green);Sig-(白,White)

额定载荷 Rated capacities(Emax)	2,3t	温度补偿范围 Temperature range, compensated	–10℃~+40℃
灵敏度 Sensitivity	2.0±0.5mV/V	工作温度范围 Temperature range, operating	-30~+70℃
综合误差 Total error	±0.3%F.S	安全过载 Maximum safe overload	150%F.S
蠕变(30分钟)Creep error (30min)	±0.03%F.S	极限过载 Ultimate overload	200%F.S
零点平衡 Zero balance	±1%F.S	推荐激励电压 Excitation,recommend	10~12V DC
零点温度影响 TCO	±0.02%F.S/10℃	最大激励电压 Excitation,maximum	15V DC
输出温度影响 TC SPAN	±0.02%F.S/10℃	防封等级 Protection class	IP68
输入阻抗 Input impedance	765±5Ω	材质 Construction	合金钢Alloy Steel
输出阻抗 Output impedance	702±3Ω	电缆 Cable	Length:14m
绝缘电阻 Insulation impedance	≥5000MΩ		Diameter: ϕ6mm

XZB Loadcell

XZB

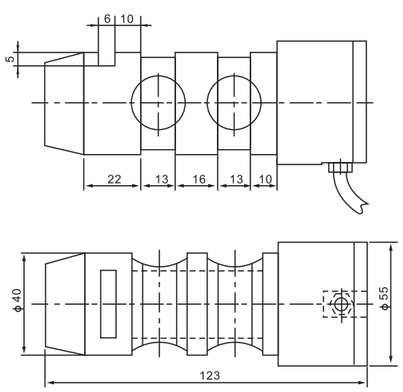

可根据用户安装尺寸订做不同量程的传感器
Can make load cells in different capacity according to customer's installing dimensions

各种安全限制专用
Every kinds of safe limiter

TECHNICAL PARAMETER| 4Wires:Exc+(红,Red);Exc-(黑,Black);Sig+(绿,Green);Sig-(白,White)

额定载荷 Rated capacities(Emax)	2,3,4t	温度补偿范围 Temperature range, compensated	–10℃~+40℃
灵敏度 Sensitivity	1.0±0.01mV/V	工作温度范围 Temperature range, operating	-30~+70℃
综合误差 Total error	±0.5%F.S	安全过载 Maximum safe overload	150%F.S
蠕变(30分钟)Creep error (30min)	±0.05%F.S	极限过载 Ultimate overload	200%F.S
零点平衡 Zero balance	±1%F.S	推荐激励电压 Excitation,recommend	10~12V DC
零点温度影响 TCO	±0.05%F.S/10℃	最大激励电压 Excitation,maximum	15V DC
输出温度影响 TC SPAN	±0.05%F.S/10℃	防封等级 Protection class	IP67
输入阻抗 Input impedance	750±10Ω	材质 Construction	合金钢Alloy Steel
输出阻抗 Output impedance	702±3Ω	电缆 Cable	Length:4m
绝缘电阻 Insulation impedance	≥5000MΩ		Diameter: ϕ5mm

XZNZB-A Load cell

XZNZB-A

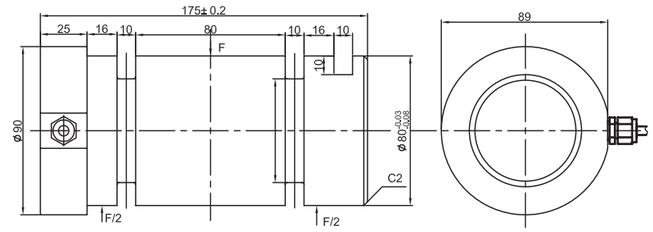

可根据用户安装尺寸订做不同量程的传感器
Can make load cells in different capacity according to customer's installing dimensions

用于施工升降机、装载机等安全限制专用场合
Construction lifter, loading machine etc.safe limit special situation

TECHNICAL PARAMETER| 4Wires:Exc+(红,Red);Exc-(黑,Black);Sig+(绿,Green);Sig-(白,White)

额定载荷 Rated capacities(Emax)	15kN	温度补偿范围 Temperature range, compensated	–10~+40℃
灵敏度 Sensitivity	1.0±0.05mV/V	工作温度范围 Temperature range, operating	-30~+70℃
综合误差 Total error	±0.5%F.S	安全过载 Maximum safe overload	150%F.S
蠕变(30分钟)Creep error (30min)	±0.3%F.S	极限过载 Ultimate overload	200%F.S
零点平衡 Zero balance	±1%F.S	推荐激励电压 Excitation,recommend	10~12V DC
零点温度影响 TCO	±0.3%F.S/10℃	最大激励电压 Excitation,maximum	15V DC
输出温度影响 TC SPAN	±0.3%F.S/10℃	防护等级 Protection class	IP67
输入阻抗 Input impedance	750±10Ω	材质 Construction	合金钢Alloy Steel
输出阻抗 Output impedance	702±3Ω	电缆 Cable	Length: 15m
绝缘电阻 Insulation impedance	≥5000MΩ		Diameter: ϕ5mm

XZB-A/-ASS Loadcell

XZB-A/-ASS

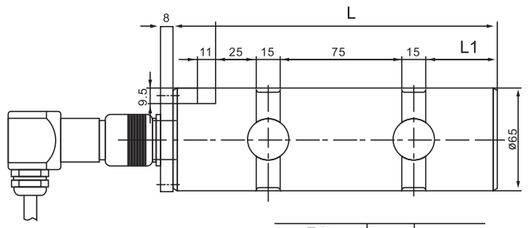

可根据用户安装尺寸订做不同量程的传感器
Can make load cells in different capacity according to customer's installing dimensions

量程(t) Capacity	L	L1
15	186	30
7,10,20	200	44

各种安全限制专用
Every kinds of safe limiter

TECHNICAL PARAMETER| 4Wires:Exc+(红,Red);Exc-(黑,Black);Sig+(绿,Green);Sig-(白,White)

额定载荷 Rated capacities(Emax)	7,10,15,20t	温度补偿范围 Temperature range, compensated	–10℃~+40℃
灵敏度 Sensitivity	1.0±0.01mV/V	工作温度范围 Temperature range, operating	-30~+70℃
综合误差 Total error	±0.5%F.S	安全过载 Maximum safe overload	150%F.S
蠕变(30分钟)Creep error (30min)	±0.1%F.S	极限过载 Ultimate overload	200%F.S
零点平衡 Zero balance	±1%F.S	推荐激励电压 Excitation,recommend	10~12V DC
零点温度影响 TCO	±0.03%F.S/10℃	最大激励电压 Excitation,maximum	15V DC
输出温度影响 TC SPAN	±0.03%F.S/10℃	防封等级 Protection class	IP67
输入阻抗 Input impedance	760±10Ω	材质 Construction	合金钢Alloy Steel,不锈钢Stainless Steel
输出阻抗 Output impedance	702±3Ω	电缆 Cable	Length:12m
绝缘电阻 Insulation impedance	≥5000MΩ		Diameter: ϕ5mm

XZBK-AX Load cell

XZBK-AX

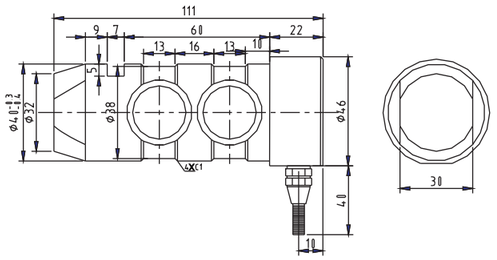

各种安全限制专用
Every kinds of safe limiter

TECHNICAL PARAMETER| 4Wires:Exc+(红,Red);Exc-(黑,Black);Sig+(绿,Green);Sig-(白,White)

额定载荷 Rated load	3 t	工作温度范围 Operating Temp Range	–30~+70℃
灵敏度 Sensitivity	1.0±0.01 mV/V	安全过载 Safe load limit	150%F.S
综合误差 Total error	±0.5%F.S	极限过载 Lateral load limit	200%F.S
蠕变（30分钟）Creep(30min)	±0.5%F.S	推荐激励电压 Recommend excitation	10~12V DC
零点平衡 Zero balance	±1%F.S	最大激励电压 Maximum excitation	15V DC
零点温度影响 TCO	±0.5%F.S/10℃	密封等级Protection Class	IP67
输出温度影响 TC SPAN	±0.5%F.S/10℃	材质Construction	合金钢 Alloy Steel
输入阻抗 Input resistance	750±20Ω	电缆Cable	Length:4m
输出阻抗 Output resistance	702±3Ω		Diameter: ϕ5mm
绝缘电阻 Insulation resistance	≥5000MΩ		

XZNLG-ATj Load cell

XZNLG-ATj

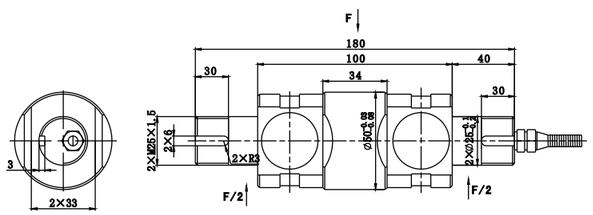

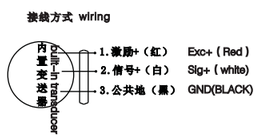

技术要求
1.输入电压:DC12V
2.输出0.5~5V
3.导线：三芯屏蔽电缆15m
4.性能：0.5%
5.防水等级：IP68
6.安全过载150%，极限过载300%

Technical paramter:
1.Tnput Voltage:DC12V
2.output0.5~5V
3.Cable:3-wire shield cable 15m
4.total error:0.5%
5.Protection class:Ip68
6.Safe overload 150%,ultimate overload 300%

XZE Load cell

XZE

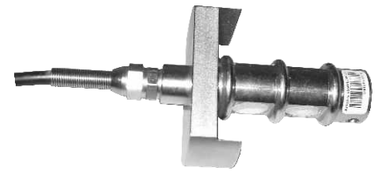

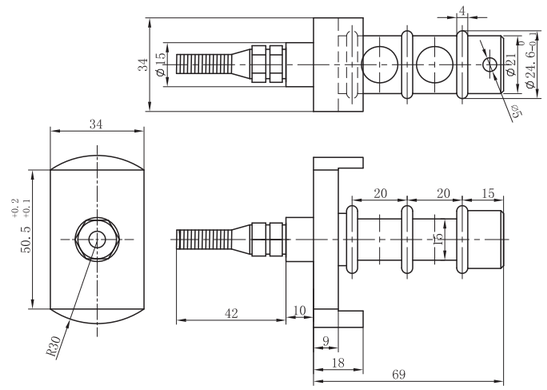

检测铁轨扳道电机拉力场合
Test steel railway motor tenstion application

TECHNICAL PARAMETER| 4Wires:Exc+(红,Red);Exc-(黑,Black);Sig+(绿,Green);Sig-(白,White)

额定载荷 Rated capacities(Emax)	800kg	温度补偿范围 Temperature range, compensated	–10~+40℃
灵敏度 Sensitivity	2.0±0.1mV/V	工作温度范围 Temperature range, operating	-30~+70℃
综合误差 Total error	±0.3%F.S	安全过载 Maximum safe overload	120%F.S
蠕变(30分钟)Creep error (30min)	±0.1%F.S	极限过载 Ultimate overload	150%F.S
零点平衡 Zero balance	±1%F.S	推荐激励电压 Excitation,recommend	10~12V DC
零点温度影响 TCO	±0.05%F.S/10℃	最大激励电压 Excitation,maximum	15V DC
输出温度影响 TC SPAN	±0.05%F.S/10℃	防护等级 Protection class	IP66
输入阻抗 Input impedance	720±20Ω	材质 Construction	合金钢Alloy Steel
输出阻抗 Output impedance	702±10Ω	电缆 Cable	Length: 2m
绝缘电阻 Insulation impedance	≥5000MΩ		Diameter: ϕ5mm

SCNEB-m Load cell

SCNEB-m

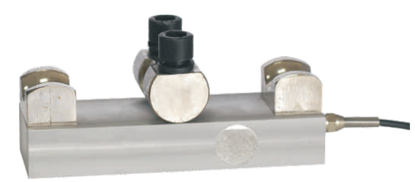

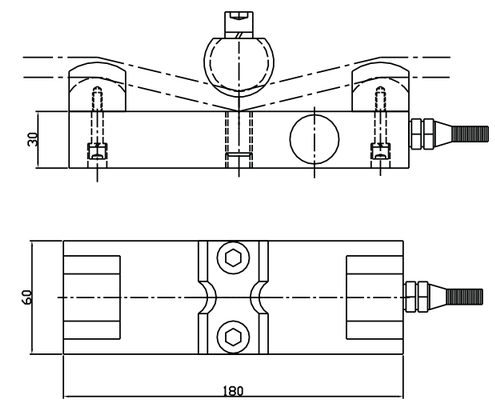

应用于钢丝绳过载，超限载控制
Steel rope overload alarming overload limit control

TECHNICAL PARAMETER| 4Wires:Exc+(红,Red);Exc-(黑,Black);Sig+(绿,Green);Sig-(白,White)

额定载荷 Rated load	1，2，3，5t	工作温度范围 Operating Temp Range	–30 ~ +70℃
灵敏度 Sensitivity	0.7±0.1mV/V	安全过载 Safe load limit	120%F.S
综合误差 Total error	±0.5%F.S	极限过载 Lateral load limit	150%F.S
蠕变（30分钟）Creep(30min)	±0.1%F.S	推荐激励电压 Recommend excitation	10 ~ 12V DC
零点平衡 Zero balance	±1%F.S	最大激励电压 Maximum excitation	15V DC
零点温度影响 TCO	±0.1%F.S/10℃	密封等级 Protection Class	IP67
输出温度影响 TC SPAN	±0.3%F.S/10℃	材质 Construction	铝合金Alloy Steel
输入阻抗 Input resistance	400±50Ω	电缆 Cable	Length： 0.3m
输出阻抗 Output resistance	352±3Ω		Diameter：ϕ5mm
绝缘电阻 Insulation resistance	≥5000MΩ		

SCNF-AX Load cell

SCNF-AX

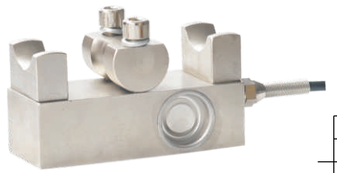

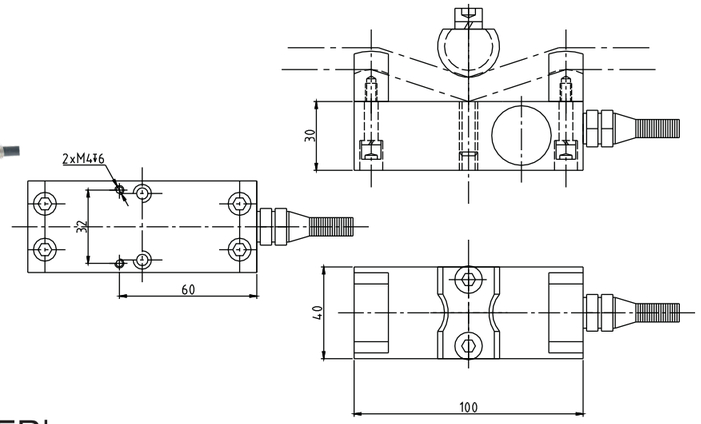

适用于钢丝绳过载报警，超限载控制
Suitable for steel wire overload protection

TECHNICAL PARAMETER| 4Wires:Exc+(红,Red);Exc-(黑,Black);Sig+(绿,Green);Sig-(白,White)

额定载荷 Rated load	1,2,3,5t	工作温度范围 Operating Temp Range	–30~+70℃
灵敏度 Sensitivity	0.7±0.1 mV/V	安全过载 Safe load limit	120%F.S
综合误差 Total error	±0.5%F.S	极限过载 Lateral load limit	150%F.S
蠕变（30分钟）Creep(30min)	±0.1%F.S	推荐激励电压 Recommend excitation	10~12V DC
零点平衡 Zero balance	±1%F.S	最大激励电压 Maximum excitation	15V DC
零点温度影响 TCO	±0.1%F.S/10℃	密封等级Protection Class	IP67
输出温度影响 TC SPAN	±0.3%F.S/10℃	材质Construction	合金钢 Alloy Steel
输入阻抗 Input resistance	750±50Ω	电缆Cable	Length:10m
输出阻抗 Output resistance	702±3Ω		Diameter: ϕ5mm
绝缘电阻 Insulation resistance	≥5000MΩ		

SCNC-A Load cell

SCNC-A

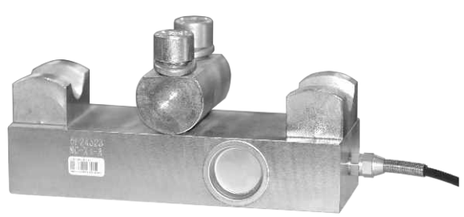

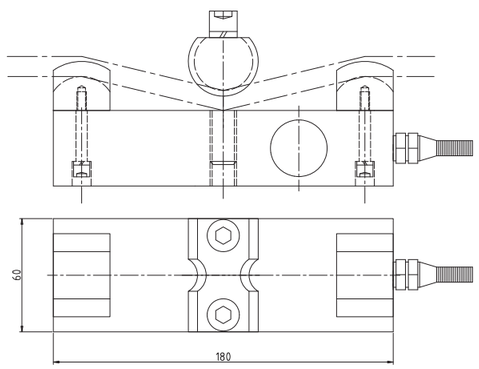

适用于钢丝绳过载报警，超限载控制
Suitable for steel wire overload protection

TECHNICAL PARAMETER| 4Wires:Exc+(红,Red);Exc-(黑,Black);Sig+(绿,Green);Sig-(白,White)

额定载荷 Rated capacities(Emax)	1,2,3,5t	温度补偿范围 Temperature range, compensated	–10℃~+40℃
综合误差 Total error	±5%F.S	工作温度范围 Temperature range, operating	-30~+70℃
蠕变(30分钟)Creep error (30min)	±0.05%F.S	安全过载 Maximum safe overload	300%F.S
零点平衡 Zero balance	±1%F.S	极限过载 Ultimate overload	500%F.S
零点温度影响 TCO	±0.03%F.S/10℃	推荐激励电压 Excitation,recommend	10~12V DC
输出温度影响 TC SPAN	±0.03%F.S/10℃	最大激励电压 Excitation,maximum	15V DC
输入阻抗 Input impedance	400±20Ω	防护等级 Protection class	IP67
输出阻抗 Output impedance	352±3Ω	材质 Construction	合金钢Alloy Steel
绝缘电阻 Insulation impedance	≥5000MΩ	电缆 Cable	Length: 0.5m
			Diameter: ϕ 5mm

DT-A Loadcell

DT-A

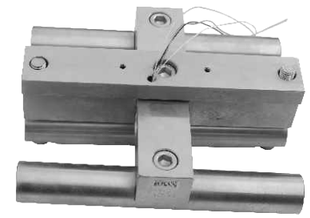

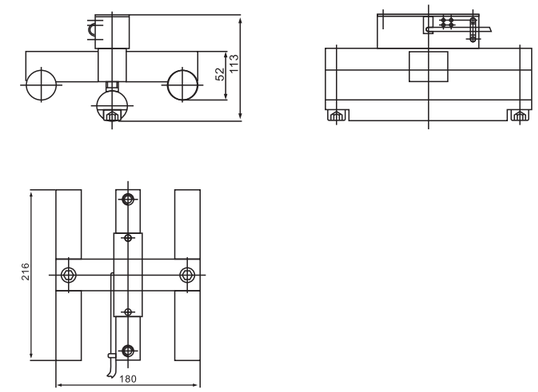

各种安全限制装置及各种张力称重装置
Every kinds of safe limiter & tension weighing device

TECHNICAL PARAMETER| 4Wires:Exc+(红,Red);Exc-(黑,Black);Sig+(绿,Green);Sig-(白,White)

额定载荷 Rated capacities(Emax)	5t	温度补偿范围 Temperature range, compensated	–10℃~+40℃
灵敏度 Sensitivity	2.0± 0.01 mV/V	工作温度范围 Temperature range, operating	-30~+70℃
综合误差 Total error	±0.3%F.S	安全过载 Maximum safe overload	150%F.S
蠕变(30分钟)Creep error (30min)	±0.05%F.S	极限过载 Ultimate overload	250%F.S
零点平衡 Zero balance	±1%F.S	推荐激励电压 Excitation,recommend	10~12V DC
零点温度影响 TCO	±0.02%F.S/10℃	最大激励电压 Excitation,maximum	15V DC
输出温度影响 TC SPAN	±0.02%F.S/10℃	防封等级 Protection class	IP68
输入阻抗 Input impedance	750±10Ω	材质 Construction	合金钢Alloy Steel
输出阻抗 Output impedance	702±3Ω	电缆 Cable	
绝缘电阻 Insulation impedance	≥5000MΩ		

DTE-A Loadcell

DTE-A

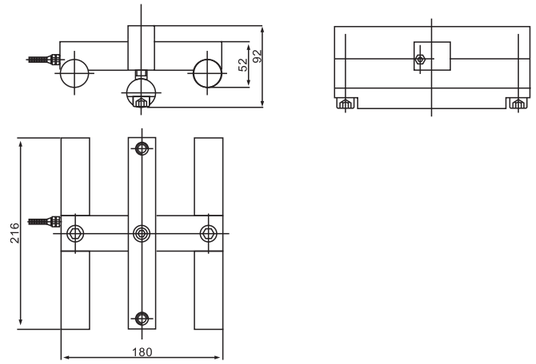

各种张力称重装置
Every kinds of tension weighing device

TECHNICAL PARAMETER| 4Wires:Exc+(红,Red);Exc-(黑,Black);Sig+(绿,Green);Sig-(白,White)

额定载荷 Rated capacities(Emax)	5t	温度补偿范围 Compensated temp range	–10℃~+40℃
灵敏度 Sensitivity	2.0±0.01mV/V	工作温度范围 Operating temp range	-30~+70℃
综合误差 Total error	±0.3%F.S	安全过载 Safe over load	150%F.S
蠕变（30分钟）Creep erro (30min)	±0.05%F.S	极限过载 Ultimate over load	200%F.S
零点平衡 Zero balance	±1%F.S	推荐激励电压 Recommend excitation	10~12V DC
零点温度影响 TCO	±0.02%F.S/10℃	最大激励电压 Max excitation	15V DC
输出温度影响 TC SPAN	±0.02%F.S/10℃	密封等级 Environmental protection	IP68
输入阻抗 Input impedance	750±10Ω	材质 Material	合金钢Alloy Steel
输出阻抗 Output impedance	702±3Ω	电缆 Cable	Length:14m
绝缘电阻 Insulation impedance	≥5000MΩ		Diameter: ϕ 6mm

BTU-A Loadcell

BTU-A

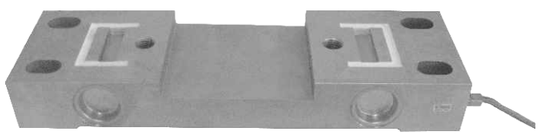

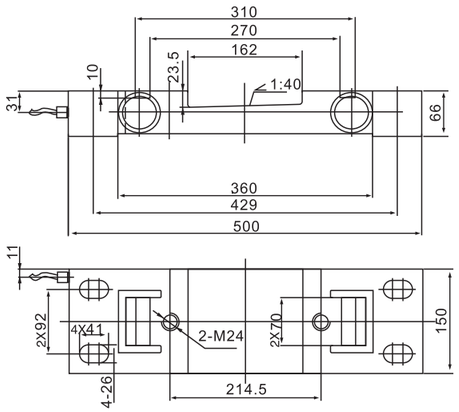

轨道衡
Railway scale

TECHNICAL PARAMETER| 4Wires:Exc+(红,Red);Exc-(黑,Black);Sig+(绿,Green);Sig-(白,White)

额定载荷 Rated capacities(Emax)	20t	温度补偿范围 Temperature range, compensated	–10℃~+40℃
灵敏度 Sensitivity	2.0±0.003mV/V	工作温度范围 Temperature range, operating	-30~+70℃
综合误差 Total error	±0.3%F.S	安全过载 Maximum safe overload	150%F.S
蠕变(30分钟)Creep error (30min)	±0.03%F.S	极限过载 Ultimate overload	250%F.S
零点平衡 Zero balance	±1%F.S	推荐激励电压 Excitation,recommend	10~12V DC
零点温度影响 TCO	±0.05%F.S/10℃	最大激励电压 Excitation,maximum	15V DC
输出温度影响 TC SPAN	±0.02%F.S/10℃	防封等级 Protection class	IP68
输入阻抗 Input impedance	750± 10Ω	材质 Construction	合金钢Alloy Steel
输出阻抗 Output impedance	702±3Ω	电缆 Cable	Length:16m
绝缘电阻 Insulation impedance	≥5000MΩ		Diameter: φ6mm

BTQ-A Loadcell

BTQ-A

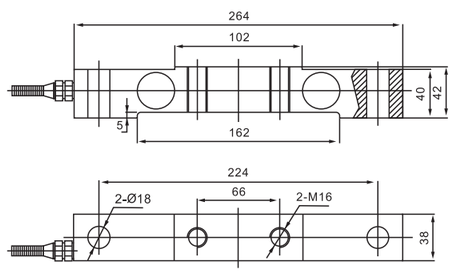

轻轨衡、天车秤
Light railway scale, travelling crane scale

TECHNICAL PARAMETER| 4Wires:Exc+(红,Red);Exc-(黑,Black);Sig+(绿,Green);Sig-(白,White)

额定载荷 Rated capacities(Emax)	1.5 t	温度补偿范围 Temperature range, compensated	–10℃~+40℃
灵敏度 Sensitivity	1.5±0.006mV/V	工作温度范围 Temperature range, operating	-30~+70℃
综合误差 Total error	±0.2%F.S	安全过载 Maximum safe overload	150%F.S
蠕变(30分钟)Creep error (30min)	±0.02%F.S	极限过载 Ultimate overload	250%F.S
零点平衡 Zero balance	±1%F.S	推荐激励电压 Excitation,recommend	10~12V DC
零点温度影响 TCO	±0.02%F.S/10℃	最大激励电压 Excitation,maximum	15V DC
输出温度影响 TC SPAN	±0.02%F.S/10℃	防封等级 Protection class	IP68
输入阻抗 Input impedance	750±10Ω	材质 Construction	合金钢Alloy Steel
输出阻抗 Output impedance	702±3Ω	电缆 Cable	Length:3m
绝缘电阻 Insulation impedance	≥5000MΩ		Diameter: φ6mm

BTW-A Loadcell

BTW-A

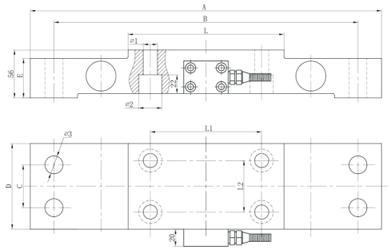

单位 (mm) / 代号	BTW-AX1-5t	BTW-AX2.5t	BTW-AX4~10t
A	350	410	410
B	310	355	355
C	38	50	50
D	75	100	100
E	46	44.5	46
L	151	181	211
L1	100	130	160
L2	40	60	60
01	017.5	017.5	017
02	028	028	027
03	018	022	021.5

起重量限制器
Lifting Weight Limiter

TECHNICAL PARAMETER| 4Wires:Exc+(红,Red);Exc-(黑,Black);Sig+(绿,Green);Sig-(白,White)

额定载荷 Rated capacities(Emax)	1.5,2.5,4,5,7.5,10t	温度补偿范围 Temperature range, compensated	–10℃~+40℃
灵敏度 Sensitivity	1.2±0.002mV/V	工作温度范围 Temperature range, operating	-30~+70℃
综合误差 Total error	±0.2%F.S	安全过载 Maximum safe overload	150%F.S
蠕变(30分钟)Creep error (30min)	±0.05%F.S	极限过载 Ultimate overload	250%F.S
零点平衡 Zero balance	±1%F.S	推荐激励电压 Excitation,recommend	10~12V DC
零点温度影响 TCO	±0.03%F.S/10℃	最大激励电压 Excitation,maximum	15V DC
输出温度影响 TC SPAN	±0.03%F.S/10℃	防封等级 Protection class	IP68
输入阻抗 Input impedance	750±10Ω	材质 Construction	合金钢Alloy Steel
输出阻抗 Output impedance	702±3Ω	电缆 Cable	Length:2m
绝缘电阻 Insulation impedance	≥5000MΩ		Diameter: φ6mm

BTEC-A Loadcell

BTEC-A

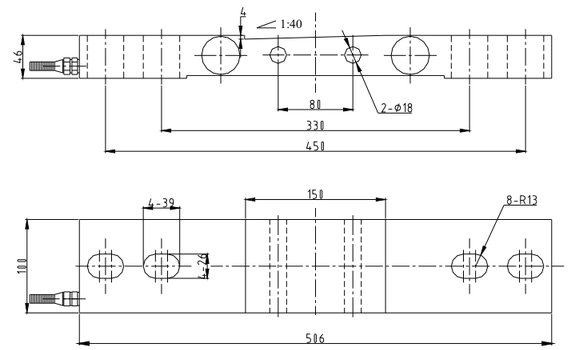

各种轨道衡
Railway scale

TECHNICAL PARAMETER| 4Wires:Exc+(红,Red);Exc-(黑,Black);Sig+(绿,Green);Sig-(白,White)

额定载荷 Rated capacities(Emax)	15,20t	温度补偿范围 Temperature range, compensated	–10℃~+40℃
灵敏度 Sensitivity	1.7±0.005mV/V	工作温度范围 Temperature range, operating	-30~+70℃
综合误差 Total error	±0.3%F.S	安全过载 Maximum safe overload	150%F.S
蠕变(30分钟)Creep error (30min)	±0.05%F.S	极限过载 Ultimate overload	200%F.S
零点平衡 Zero balance	±1%F.S	推荐激励电压 Excitation,recommend	10~12V DC
零点温度影响 TCO	±0.05%F.S/10℃	最大激励电压 Excitation,maximum	15V DC
输出温度影响 TC SPAN	±0.05%F.S/10℃	防封等级 Protection class	IP68
输入阻抗 Input impedance	750±10Ω	材质 Construction	合金钢Alloy Steel
输出阻抗 Output impedance	702±3Ω	电缆 Cable	Length:16m
绝缘电阻 Insulation impedance	≥5000MΩ		Diameter: φ6mm

BTGB–A Loadcell

BTGB–A

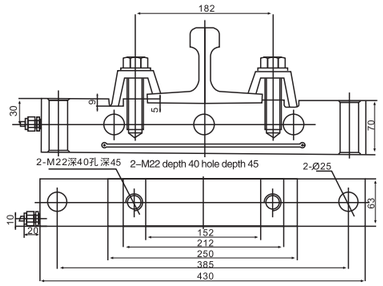

各种轨道衡
Railway scale

TECHNICAL PARAMETER| 4Wires:Exc+(红,Red);Exc-(黑,Black);Sig+(绿,Green);Sig-(白,White)

额定载荷 Rated capacities(Emax)	12.5,20,30t	温度补偿范围 Temperature range, compensated	–10℃~+40℃
灵敏度 Sensitivity	2.0±0.002mV/V	工作温度范围 Temperature range, operating	-30~+70℃
综合误差 Total error	±0.3%F.S	安全过载 Maximum safe overload	150%F.S
蠕变(30分钟)Creep error (30min)	±0.03%F.S	极限过载 Ultimate overload	200%F.S
零点平衡 Zero balance	±1%F.S	推荐激励电压 Excitation,recommend	10~12V DC
零点温度影响 TCO	±0.02%F.S/10℃	最大激励电压 Excitation,maximum	15V DC
输出温度影响 TC SPAN	±0.05%F.S/10℃	防封等级 Protection class	IP68
输入阻抗 Input impedance	750±10Ω	材质 Construction	合金钢Alloy Steel
输出阻抗 Output impedance	702±3Ω	电缆 Cable	Length:12m
绝缘电阻 Insulation impedance	≥5000MΩ		Diameter: ϕ6mm

BTGE Loadcell

BTGE

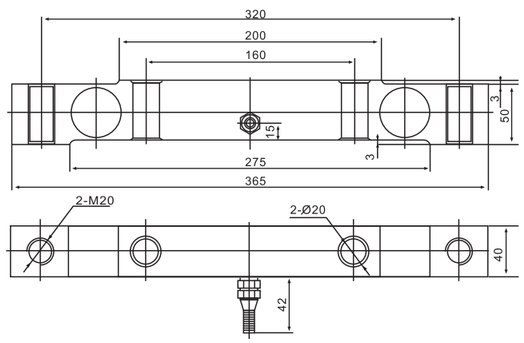

各种轨道衡
Railway scale

TECHNICAL PARAMETER| 4Wires:Exc+(红,Red);Exc-(黑,Black);Sig+(绿,Green);Sig-(白,White)

额定载荷 Rated capacities(Emax)	3t	温度补偿范围 Temperature range, compensated	–10℃~+40℃
灵敏度 Sensitivity	2.0±0.003mV/V	工作温度范围 Temperature range, operating	-30~+70℃
综合误差 Total error	±0.1%F.S	安全过载 Maximum safe overload	150%F.S
蠕变(30分钟)Creep error (30min)	±0.02%F.S	极限过载 Ultimate overload	200%F.S
零点平衡 Zero balance	±1%F.S	推荐激励电压 Excitation,recommend	10~12V DC
零点温度影响 TCO	±0.02%F.S/10℃	最大激励电压 Excitation,maximum	15V DC
输出温度影响 TC SPAN	±0.05%F.S/10℃	防封等级 Protection class	IP67
输入阻抗 Input impedance	750±10Ω	材质 Construction	合金钢Alloy Steel
输出阻抗 Output impedance	702±3Ω	电缆 Cable	Length:12m
绝缘电阻 Insulation impedance	≥5000MΩ		Diameter: ϕ6mm

BTL Loadcell

BTL

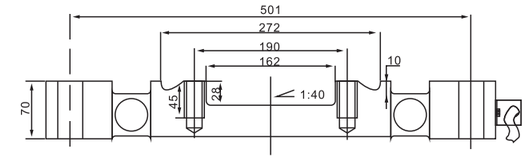

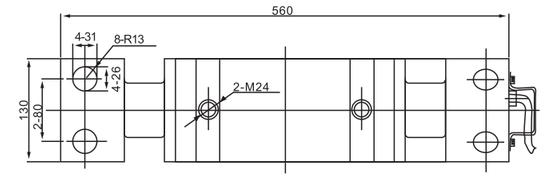

各种轨道衡
Railway scale

TECHNICAL PARAMETER| 4Wires:Exc+(红,Red);Exc-(黑,Black);Sig+(绿,Green);Sig-(白,White)

额定载荷 Rated capacities(Emax)	15t	温度补偿范围 Temperature range, compensated	–10℃~+40℃
灵敏度 Sensitivity	1.6±0.005mV/V	工作温度范围 Temperature range, operating	-30~+70℃
综合误差 Total error	±0.3%F.S	安全过载 Maximum safe overload	150%F.S
蠕变(30分钟)Creep error (30min)	±0.05%F.S	极限过载 Ultimate overload	200%F.S
零点平衡 Zero balance	±1%F.S	推荐激励电压 Excitation,recommend	10~12V DC
零点温度影响 TCO	±0.05%F.S/10℃	最大激励电压 Excitation,maximum	15V DC
输出温度影响 TC SPAN	±0.05%F.S/10℃	防封等级 Protection class	IP67
输入阻抗 Input impedance	750±10Ω	材质 Construction	合金钢Alloy Steel
输出阻抗 Output impedance	702±3Ω	电缆 Cable	Length:16m
绝缘电阻 Insulation impedance	≥5000MΩ		Diameter: ϕ6mm

BTGFC–A Loadcell

BTGFC–A

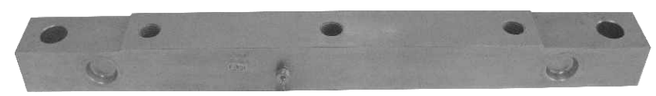

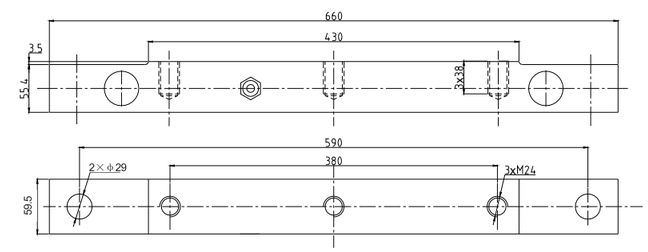

TECHNICAL PARAMETER| 4Wires:Exc+(红,Red);Exc-(黑,Black);Sig+(绿,Green);Sig-(白,White)

额定载荷 Rated capacities(Emax)	20t	温度补偿范围 Temperature range, compensated	–10℃~+40℃
灵敏度 Sensitivity	2.0±0.01mV/V	工作温度范围 Temperature range, operating	-30~70℃
综合误差 Total error	±0.1%F.S	安全过载 Maximum safe overload	150%F.S
蠕变(30分钟)Creep error (30min)	±0.05%F.S	极限过载 Ultimate overload	200%F.S
零点平衡 Zero balance	±1%F.S	推荐激励电压 Excitation,recommend	10~12DC
零点温度影响 TCO	±0.02%F.S/10℃	最大激励电压 Excitation,maximum	15V DC
输出温度影响 TC SPAN	±0.02%F.S/10℃	防封等级 Protection class	IP68
输入阻抗 Input impedance	750±10Ω	材质 Construction	合金钢Alloy Steel
输出阻抗 Output impedance	703±3Ω	电缆 Cable	Length: 12m
绝缘电阻 Insulation impedance	≥5000MΩ		Diameter: ϕ5mm

SB/SB-A/-SS/ASS Loadcell

SB/SB-A/-SS/ASS

RoHS

OIML

额定载荷(t) Rated Load	L	L1	L2	L3	L4	H1	H2/B	B1	H3	H4	D1	D2	D3
0.3,0.5,1,2,3	203	95	64	98	22	43	36.6	7	30.5	8	φ32	φ16	φ13
5,7.5,8	235	110	66	124	22	52	48	7	30	12	φ38	φ22	φ21
10	279	133	82	140	32	67	60	8.5	20	8.5	φ48	φ32	φ28
15,20,25	318	153	89	159	38	82.5	70	9.5	24	9.5	φ54	φ38	φ34

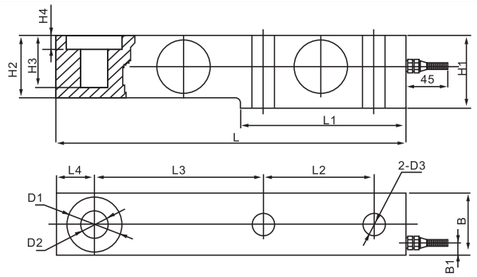

汽车衡、平台秤、配料秤及各种专用衡器
Truck scale,platform scale,blendingscale,every kinds of scale

4Wires:Exc+(红,Red);Exc-(黑,Black);Sig+(绿,Green);Sig-(白,White)(0.3 ~ 8t);
6Wires:Exc+(红,Red);Exc-(黑,Black);Sig+(绿,Green);Sig-(白,White);
sen+(蓝,Blue);sen-(黄,Yellow);(10 ~ 25t);

TECHNICAL PARAMETER|

额定载荷 Rated capacities(Emax)	0.3,0.5,1,2,3,5,7.5, 8,10,15,20,25t	温度补偿范围 Temperature range, compensated	–10℃~+40℃
灵敏度 Sensitivity	2.0±0.002mV/V	工作温度范围 Temperature range, operating	–30℃~+70℃
精度等级 Accuracy class	C2~C5	安全过载 Maximum safe overload	150%F.S;120%F.S(20~25t)
		极限过载 Ultimate overload	250%F.S;200%F.S(20~25t)
零点平衡 Zero balance	±1%F.S	推荐激励电压 Excitation,recommend	10~12V DC
零点温度影响 TCO	±0.02%F.S/10℃	最大激励电压 Excitation,maximum	15V DC
输出温度影响 TC SPAN	±0.02%F.S/10℃	防封等级 Protection class	IP67(0.3~0.5t);IP68(1~25t)
输入阻抗 Input impedance	400±20Ω	材质 Construction	合金钢Alloy Steel 不锈钢Stainless Steel
输出阻抗 Output impedance	352±3Ω	电缆 Cable	Length:2.6m(0.3~2t),3.5m(3t);5.2m (5~8t); 7m(10t); 12m(15~25t)
绝缘电阻 Insulation impedance	≥5000MΩ		Diameter: φ5mm(0.3~ 8t) 合金钢; φ6mm(10~25t) 合金钢;（0.3~25t）不锈钢

总装图A

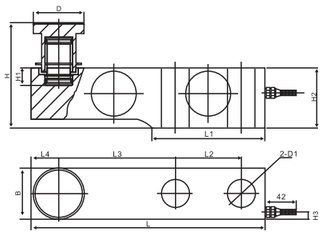

总装图B

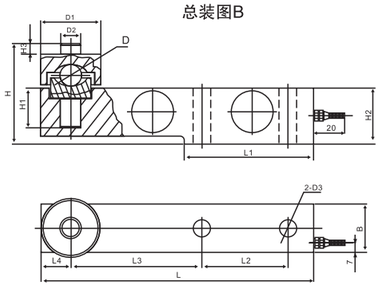

总装图C

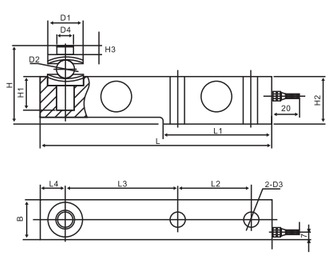

总装图A

额定载荷(t) Rated Load	尺寸(mm)Size											
	L	L1	L2	L3	L4	B	H	H1	H2	H3	D	D1
0.3,0.5,1,2,3	203	95	64	98	22	36.6	58	30.5	43	7	φ35	φ13
5,7.5 ,8	235	110	66	124	22	48	81	30	52	7	φ42	φ21
10	279	133	82	140	32	60	128	20	67	8.5	φ57	φ28
15,20,25	318	153	89	159	38	70	144	24	82.5	9.5	φ70	φ34

总装图B

额定载荷(t) Rated Load	尺寸(mm)Size													
	L	L1	L2	L3	L4	B	H	H1	H2	H3	D	D1	D2	D3
0.3,0.5,1,2,3	203	95	64	98	22	36.6	79	30.5	43	9	φ16	φ45	φ15	φ13
5,7.5 ,8	235	110	66	124	22	48	104	30	52	10	φ25	φ52	φ21	φ21

总装图C

额定载荷(t) Rated Load	尺寸(mm)Size													
	L	L1	L2	L3	L4	B	H	H1	H2	H3	D1	D2	D3	D4
0.3,0.5,1,2,3	203	95	64	98	22	36.6	68.5	30.5	43	8.5	φ30	φ16	φ13	φ15.5
5,7.5,8	235	110	66	124	22	48	102	30	52	10	φ37	φ25	φ21	φ21.5

SB/SB-A/-SS Weighing module

SB/SB-A/-SS静载模块

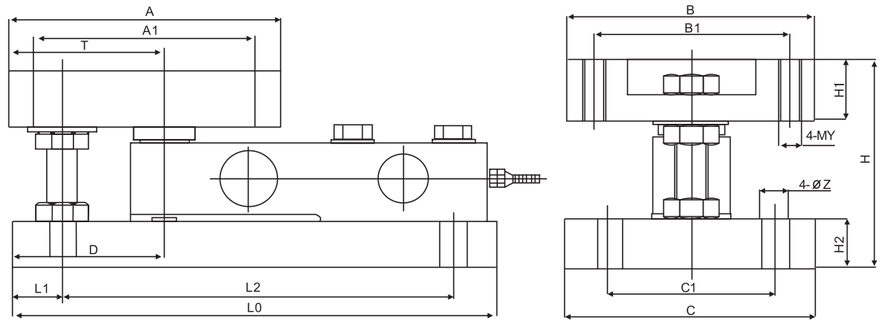

额定载荷(t) Rated Load	模块主要外形及安装尺寸															
	A	A1	B	B1	L0	L1	L2	C	C1	H	H1	H2	T	D	Y	Z
0.3~3	150	124	128	102	286	32	226	112	80	102	28	23	99	96	10	13
5,7.5,8	178	146	152	120	318	32	257	152	102	129.5	38	29.5	102	99	16	17
10	184	152	154	122	360	32	295	154	106	168	45	45	108	105	20	21
15~25	220	170	220	170	400	25	350	220	170	213	55	55	115	115	24	26

SB/SB-A/-SS Weighing module

SB/SB-A/-SS动载模块

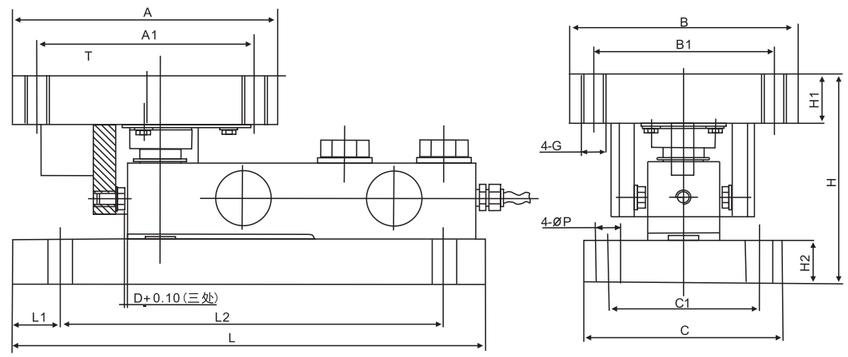

额定载荷(t) Rated Load	模块主要外形及安装尺寸														
	A	A1	B	B1	L	L1	L2	C	C1	H	H1	H2	D	G	P
0.3~3	150	124	128	102	286	32	226	112	80	107	23	23	1.6	M10	13
5,7.5,8	178	146	152	120	317.5	32	257	152	102	146	32.5	29.5	1.6	M16	17
10	184	152	154	122	360	32	295	154	106	216	44	44	3	M20	21
15~25	220	170	220	170	400	25	350	220	170	254	55	55	3	M24	26

静载模块安装方式
Static weighing module installation

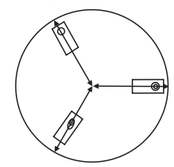

径向安装Radial mouting

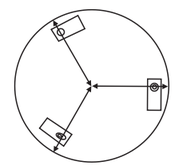

切向安装Cutting mouting

固定式Fixed Module
全浮动式Float Module
半浮动式Semi-float Module

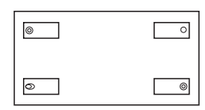

矩形安装Rectang mouting

动载模块安装方式
Dynamic weighing module installation

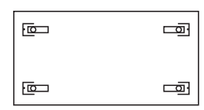

MBB Loadcell

MBB

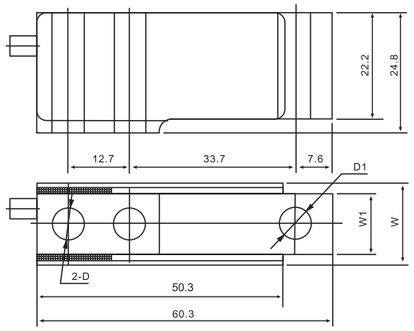

额定载荷(lb) Rated Load	W	W1	D	D1
100,150	19.1	12.7	ϕ4.4	ϕ4.4
200,250	25.4	19.1	ϕ6.5	ϕ4.4

皮带秤
Belt scale

TECHNICAL PARAMETER| 4Wires:Exc+(红,Red);Exc-(蓝,Blue);Sig+(绿,Green);Sig-(白,White)

额定载荷 Rated capacities(Emax)	100,150,200,250lb	温度补偿范围 Temperature range, compensated	–10℃~+40℃
灵敏度 Sensitivity	3.0±0.005mV/V	工作温度范围 Temperature range, operating	-30~+70℃
综合误差 Total error	±0.05%F.S	安全过载 Maximum safe overload	120%F.S
蠕变(30分钟)Creep error (30min)	±0.03%F.S;±0.05%F.S	极限过载 Ultimate overload	150%F.S
零点平衡 Zero balance	±1%F.S	推荐激励电压 Excitation,recommend	10~12V DC
零点温度影响 TCO	±0.02%F.S/10℃	最大激励电压 Excitation,maximum	15V DC
输出温度影响 TC SPAN	±0.02%F.S/10℃	防封等级 Protection class	IP66
输入阻抗 Input impedance	400±20Ω (100~150lb 不要求 No requirements)	材质 Construction	合金钢Alloy Steel
输出阻抗 Output impedance	352±3Ω	电缆 Cable	Length:1.5m
绝缘电阻 Insulation impedance	≥5000MΩ		Diameter: ϕ4mm

SBE Loadcell

SBE

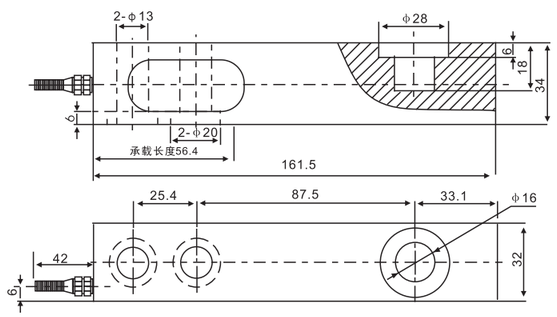

叉车秤、平台秤
Forklift scale，platform scale

TECHNICAL PARAMETER| 4Wires:Exc+(红,Red);Exc-(黑,Black);Sig+(绿,Green);Sig-(白,White)

额定载荷 Rated capacities(Emax)	1t	温度补偿范围 Temperature range, compensated	–10℃~+40℃
灵敏度 Sensitivity	2.0±0.002mV/V	工作温度范围 Temperature range, operating	-30~+70℃
综合误差 Total error	±0.03%F.S	安全过载 Maximum safe overload	150%F.S
蠕变(30分钟)Creep error (30min)	±0.03%F.S	极限过载 Ultimate overload	250%F.S
零点平衡 Zero balance	±1%F.S	推荐激励电压 Excitation,recommend	10~12V DC
零点温度影响 TCO	±0.02%F.S/10℃	最大激励电压 Excitation,maximum	15V DC
输出温度影响 TC SPAN	±0.02%F.S/10℃	防封等级 Protection class	IP67
输入阻抗 Input impedance	400±20Ω	材质 Construction	合金钢Alloy Steel
输出阻抗 Output impedance	352±3Ω	电缆 Cable	Length:1.4m
绝缘电阻 Insulation impedance	≥5000MΩ		Diameter: ϕ5mm

SBK Loadcell

SBK

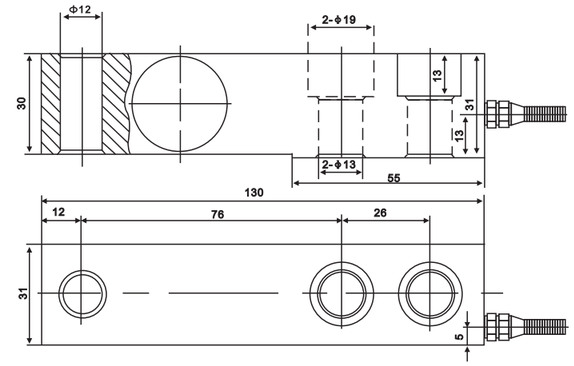

叉车秤 地上衡、配料秤、低平面台秤
Forklift scale,floor scale, Blending scale,low platform scale

TECHNICAL PARAMETER| 4Wires:Exc+(红,Red);Exc-(黑,Black);Sig+(绿,Green);Sig-(白,White)

额定载荷 Rated capacities(Emax)	1t	温度补偿范围 Temperature range, compensated	–10℃~+40℃
灵敏度 Sensitivity	2.4±0.002mV/V	工作温度范围 Temperature range, operating	-30~+70℃
综合误差 Total error	±0.03%F.S	安全过载 Maximum safe overload	150%F.S
蠕变(30分钟)Creep error (30min)	±0.03%F.S	极限过载 Ultimate overload	300%F.S
零点平衡 Zero balance	±1%F.S	推荐激励电压 Excitation,recommend	10~12V DC
零点温度影响 TCO	±0.02%F.S/10℃	最大激励电压 Excitation,maximum	15V DC
输出温度影响 TC SPAN	±0.02%F.S/10℃	防封等级 Protection class	IP67
输入阻抗 Input impedance	400±20Ω	材质 Construction	合金钢Alloy Steel
输出阻抗 Output impedance	352±3Ω	电缆 Cable	Length: 1.5m
绝缘电阻 Insulation impedance	≥5000MΩ		Diameter: ϕ5mm

SBO/SBO–A Loadcell

SBO/SBO–A

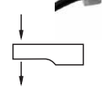

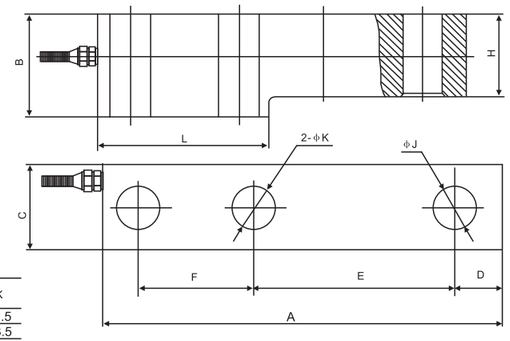

额定载荷(t) Rated Load	A	B	C	D	E	F	H	L	J	K
0.1~0.3	135	36	26	18	75	25	32	58	11.5	11.5
0.5~2	135	38	30	18	75	25	34	58	13.5	13.5
3~5	170	48	38	20	85	50	39	79	18	18.5
10	263	60	60	30	118	90	52	143	26	26

TECHNICAL PARAMETER| 4Wires:Exc+(红,Red);Exc-(黑,Black);Sig+(绿,Green);Sig-(白,White)

额定载荷 Rated capacities(Emax)	0.1,0.2,0.3,0.5,1,2,3,5,10t	温度补偿范围 Temperature range, compensated	–10℃~+40℃
灵敏度 Sensitivity	2.0±0.002mV/V	工作温度范围 Temperature range, operating	–30℃~+70℃
综合误差 Total error	0.1~2t:±0.03%F.S;3~5t:±0.05%F.S;		
	10t:0.1%F.S(合金钢产品Alloy Steel Product)		
	0.1~3t:±0.05%F.S;5t:0.1%F.S;	安全过载 Maximum safe overload	150%F.S
	10t:0.2%F.S(不锈钢产品Stainless Steel Product)	极限过载 Ultimate overload	250%F.S
蠕变(30分钟)Creep error (30min)	±0.02%F.S ;±0.05%F.S	推荐激励电压 Excitation,recommend	10~12V DC
零点平衡 Zero balance	±1%F.S	最大激励电压 Excitation,maximum	15V DC
零点温度影响 TCO	±0.02%F.S/10℃	防封等级 Protection class	IP67(0.1~0.5t),IP68(1~10t)
输出温度影响 TC SPAN	±0.02%F.S/10℃	材质 Construction	合金钢Alloy Steel
输入阻抗 Input impedance	400±20Ω	电缆 Cable	
输出阻抗 Output impedance	352±3Ω		Length:3m(0.1~0.5t),5m(1~5t);8m(10t)
绝缘电阻 Insulation impedance	≥5000MΩ		Diameter: ϕ5mm(0.1~5t); ϕ 6mm(10t)

SBY-A/-ASS Loadcell

SBY-A/-ASS

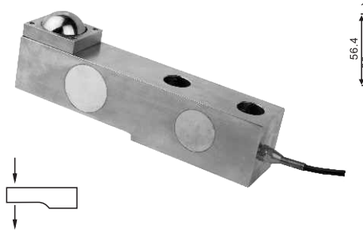

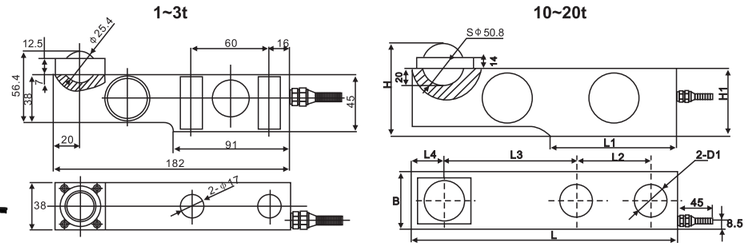

额定载荷(t) Rated Load	L	L1	L2	L3	L4	H	H1	B	D1
10	279	133	82	140	32	97.8	67	60	ϕ28
20	318	153	89	159	38	113.3	82.5	70	ϕ34

罐装秤、地上衡、配料秤
Canned scale, floor scale, blending scale

TECHNICAL PARAMETER| 4Wires:Exc+(红,Red);Exc-(黑,Black);Sig+(绿,Green);Sig-(白,White)

额定载荷 Rated capacities(Emax)	1,2,3,10,20t	温度补偿范围 Temperature range, compensated	–10℃~+40℃
灵敏度 Sensitivity	2.0±0.002mV/V	工作温度范围 Temperature range, operating	-30~+70℃
综合误差 Total error	±0.05%F.S	安全过载 Maximum safe overload	150%F.S
蠕变(30分钟)Creep error (30min)	±0.02%F.S	极限过载 Ultimate overload	200%F.S
零点平衡 Zero balance	±1%F.S	推荐激励电压 Excitation,recommend	10~12V DC
零点温度影响 TCO	±0.02%F.S/10℃	最大激励电压 Excitation,maximum	15V DC
输出温度影响 TC SPAN	±0.02%F.S/10℃	防封等级 Protection class	IP68
输入阻抗 Input impedance	400±20Ω	材质 Construction	合金钢Alloy Steel 不锈钢Stainless Steel
输出阻抗 Output impedance	352±3Ω	电缆 Cable	Length:1.5m(1~3t),7m(10t);12m(20t)
绝缘电阻 Insulation impedance	≥5000MΩ		Diameter: ϕ6mm

SQBWB-A/-ASS Loadcell

SQBWB-A/-ASS

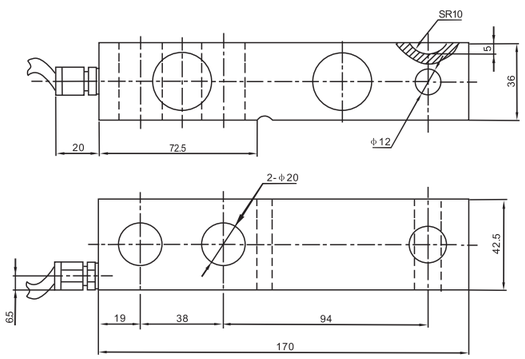

平台秤、配料控制系统、低平面台秤
Platform scale,blending scale,packing scale,Low platform scale

TECHNICAL PARAMETER| 4Wires:Exc+(红,Red);Exc-(黑,Black);Sig+(绿,Green);Sig-(白,White)

额定载荷 Rated capacities(Emax)	2.5,5t	温度补偿范围 Temperature range, compensated	–10℃~+40℃
灵敏度 Sensitivity	2.0±0.002mV/V	工作温度范围 Temperature range, operating	-30~+70℃
综合误差 Total error	±0.05%F.S	安全过载 Maximum safe overload	120%F.S
蠕变(30分钟)Creep error (30min)	±0.03%F.S	极限过载 Ultimate overload	200%F.S
零点平衡 Zero balance	±2%F.S	推荐激励电压 Excitation,recommend	10~12V DC
零点温度影响 TCO	±0.02%F.S/10℃	最大激励电压 Excitation,maximum	15V DC
输出温度影响 TC SPAN	±0.02%F.S/10℃	防封等级 Protection class	IP68
输入阻抗 Input impedance	385±30Ω	材质 Construction	合金钢Alloy Steel不锈钢Stainless Steel
输出阻抗 Output impedance	350±4Ω	电缆 Cable	Length:6m
绝缘电阻 Insulation impedance	≥5000MΩ		Diameter: ϕ5mm

SBP-A/ASS Loadcell

SBP-A/ASS

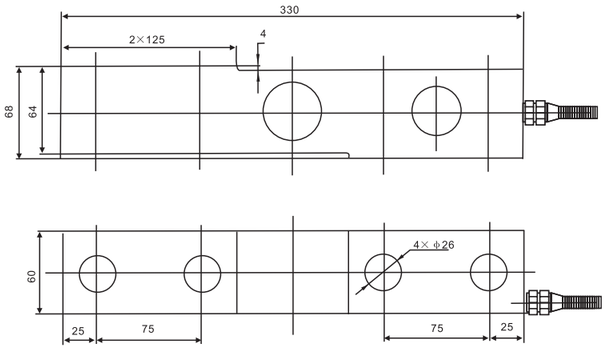

垃圾车、轨道衡、配料秤及各种专用 衡器
Garbage truck, railway scale, blending scale and other special weighing apparatus

TECHNICAL PARAMETER| 4Wires:Exc+(红,Red);Exc-(黑,Black);Sig+(绿,Green);Sig-(白,White)

额定载荷 Rated capacities(Emax)	10t	温度补偿范围 Temperature range, compensated	–10℃~+40℃
灵敏度 Sensitivity	2.0±0.002mV/V	工作温度范围 Temperature range, operating	-30~+70℃
综合误差 Total error	±0.05%F.S	安全过载 Maximum safe overload	150%F.S
蠕变(30分钟)Creep error (30min)	±0.02%F.S	极限过载 Ultimate overload	200%F.S
零点平衡 Zero balance	±1%F.S	推荐激励电压 Excitation,recommend	10~12V DC
零点温度影响 TCO	±0.02%F.S/10℃	最大激励电压 Excitation,maximum	15V DC
输出温度影响 TC SPAN	±0.02%F.S/10℃	防封等级 Protection class	IP68
输入阻抗 Input impedance	400±20Ω	材质 Construction	合金钢Alloy Steel不锈钢Stainless Steel
输出阻抗 Output impedance	352±3Ω	电缆 Cable	Length:10m
绝缘电阻 Insulation impedance	≥5000MΩ		Diameter: ϕ6mm

SBG/SBL Loadcell

SBG/SBL

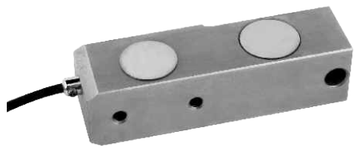

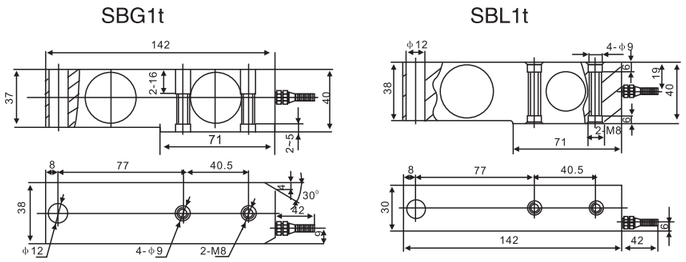

叉车秤、地上衡、配料秤、低平面台秤
Forklift scale, floor scale,blending scale, low platform scale

TECHNICAL PARAMETER| 4Wires:Exc+(红,Red);Exc-(黑,Black);Sig+(绿,Green);Sig-(白,White)

额定载荷 Rated capacities(Emax)	1t	温度补偿范围 Temperature range, compensated	–10℃~+40℃
灵敏度 Sensitivity	2.0±0.002mV/V	工作温度范围 Temperature range, operating	-30~+70℃
综合误差 Total error	±0.03%F.S	安全过载 Maximum safe overload	150%F.S
蠕变(30分钟)Creep error (30min)	±0.03%F.S	极限过载 Ultimate overload	200%F.S
零点平衡 Zero balance	±1%F.S	推荐激励电压 Excitation,recommend	10~12V DC
零点温度影响 TCO	±0.02%F.S/10℃	最大激励电压 Excitation,maximum	15V DC
输出温度影响 TC SPAN	±0.02%F.S/10℃	防封等级 Protection class	IP67
输入阻抗 Input impedance	400±20Ω	材质 Construction	合金钢Alloy Steel
输出阻抗 Output impedance	352±2Ω	电缆 Cable	Length: 1.4m（SBG1t） Length: 1.5m（SBL1t）
绝缘电阻 Insulation impedance	≥5000MΩ		Diameter: ϕ5mm

SBI-A/SBJ-A Loadcell

SBI-A/SBJ-A

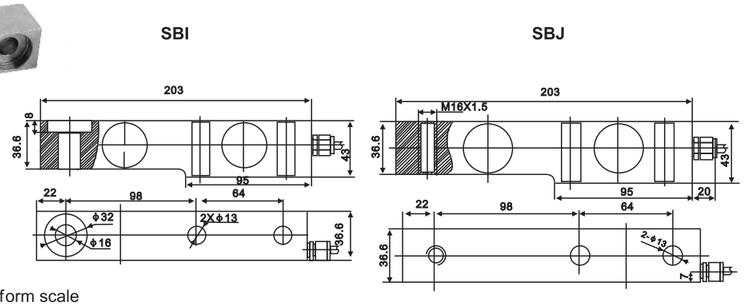

地上衡、配料秤、料斗秤、平面台秤
Floor scale, blending scale,blending scale,platform scale

TECHNICAL PARAMETER

4Wires:Exc+(红,Red);Exc-(黑,Black);Sig+(绿,Green);Sig-(白,White)

额定载荷 Rated capacities(Emax)	0.5,1,2,3t	温度补偿范围 Temperature range, compensated	-10℃~+40℃
灵敏度 Sensitivity	2.0±0.002mV/V	工作温度范围 Temperature range, operating	-30~+70℃
综合误差 Total error	±0.03%F.S ,±0.05%F.S	安全过载 Maximum safe overload	150%F.S
蠕变(30分钟)Creep error (30min)	±0.03%F.S	极限过载 Ultimate overload	200%F.S
零点平衡 Zero balance	±1%F.S	推荐激励电压 Excitation,recommend	10~12V DC
零点温度影响 TCO	±0.02%F.S/10℃	最大激励电压 Excitation,maximum	15V DC
输出温度影响 TC SPAN	±0.02%F.S/10℃	防封等级 Protection class	IP67(0.5t);IP68(1~3t)
输入阻抗 Input impedance	400±20Ω	材质 Construction	合金钢Alloy Steel
输出阻抗 Output impedance	352±2Ω	电缆 Cable	Length:2.6m(0.5~2t);3.5m(3t)
绝缘电阻 Insulation impedance	≥5000MΩ		Diameter: φ6mm

SBT/SBT-A/-ASS Loadcell

SBT/SBT-A/-ASS

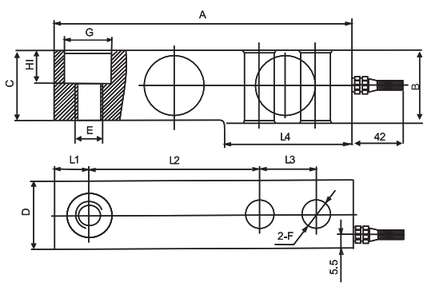

额定载荷(t) Rated Load	A	B	C	D	E	F	G	L1	L2	L3	L4	H1
0.22,0.55,1.1,1.76,2	133.4	33.5	31.5	30.7	M12	φ13.2	φ20.6	15.4	76.2	25.4	57.7	14.2
2.2	171.5	36.5	34	36.8	M20	φ20.5	φ30.2	19.1	95.3	38.1	76.2	17.0
4.4	171.5	42.9	40.4	42.9	M20	φ20.5	φ30.2	19.1	95.3	38.1	76.2	20.1

叉车秤、地上衡、配料秤、低平面台秤
Forklift scale,floor scale, blending scale ,low platform scale

TECHNICAL PARAMETER

4Wires:Exc+(红,Red);Exc-(黑,Black);Sig+(绿,Green);Sig-(白,White)

额定载荷 Rated capacities(Emax)	0.22,0.55,1.1,1.76,2,2.2,4.4t	温度补偿范围 Temperature range, compensated	-10℃~+40℃
灵敏度 Sensitivity	1.94±0.002mV/V	工作温度范围 Temperature range, operating	-30~+70℃
综合误差 Total error	±0.05%F.S	安全过载 Maximum safe overload	120%F.S
蠕变(30分钟)Creep error (30min)	±0.02%F.S ,±0.03%F.S	极限过载 Ultimate overload	200%F.S
零点平衡 Zero balance	±1%F.S	推荐激励电压 Excitation,recommend	10~12V DC
零点温度影响 TCO	±0.02%F.S/10℃	最大激励电压 Excitation,maximum	15V DC
输出温度影响 TC SPAN	±0.02%F.S/10℃	防封等级 Protection class	IP67(0.22~0.55t);IP68(1.1~4.4t)
输入阻抗 Input impedance	400±20Ω	材质 Construction	合金钢Alloy Steel 不锈钢Stainless Steel
输出阻抗 Output impedance	352±3Ω	电缆 Cable	Length:3m(0.22~2t),6m(2.2~4.4t)
绝缘电阻 Insulation impedance	≥5000MΩ		Diameter: φ5mm

SQB/SQB-A/-SS/-ASS Loadcell

SQB/SQB-A/-SS/-ASS

RoHS
OIML

平台秤、配料控制系统
Platform scales,blending scale

SQB/SQB-A 0.25~2.5t

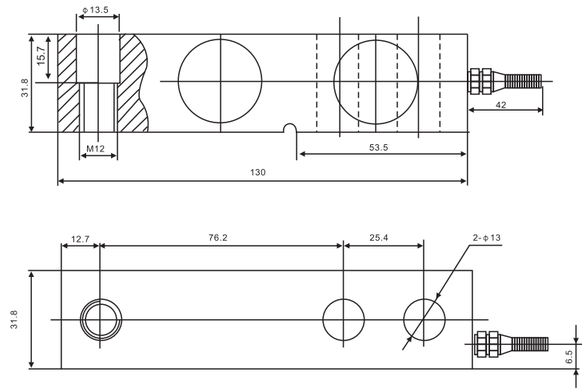

SQB/SQB-A/SQB-SS/SQB-ASS 3~10t

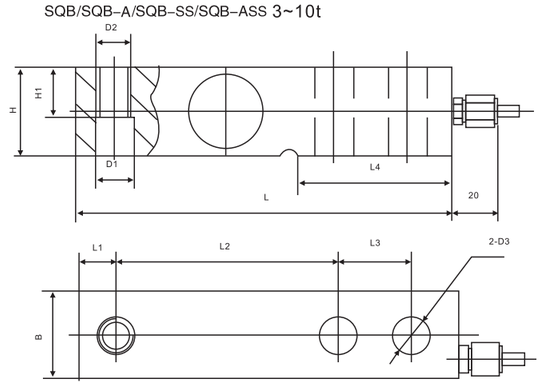

SQB-SS/SQS-ASS 0.25~2.5 t

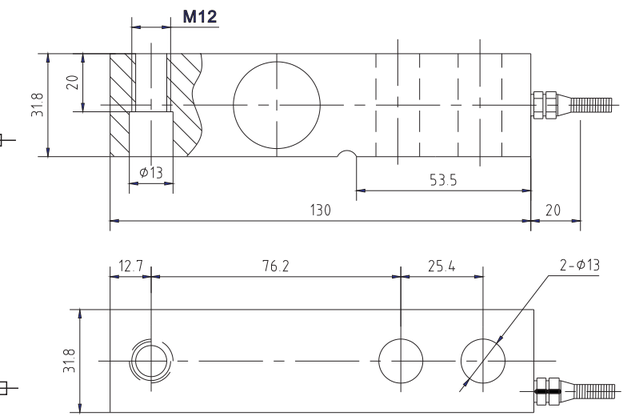

额定载荷(t) Rated Load	L	L1	L2	L3	L4	H/B	H1	D1	D2	D3
3,5	171.5	19	95.3	38.1	72.5	38.1	26	φ20	M18x1.5	φ20
7.5~10	225.5	25.3	124	50.8	102	50.8	25.4	φ27	M24x2	φ27

TECHNICAL PARAMETER

4Wires:Exc+(红,Red);Exc-(黑,Black);Sig+(绿,Green);Sig-(白,White)

额定载荷 Rated capacities(Emax)	0.25, 0.3 ,0.5,0.75,1,1.5,2,2.5,3,5,7.5,10t	温度补偿范围 Temperature range, compensated	-10℃~+40℃
灵敏度 Sensitivity	3.0±0.003mV/V(0.5~10t);2.0±0.002mV/V (0.25~0.3t)	工作温度范围 Temperature range, operating	-30~+70℃
精度等级Accuracy class	C2~C5	安全过载 Maximum safe overload	150%F.S
		极限过载 Ultimate overload	180%F.S
零点平衡 Zero balance	±1%F.S	推荐激励电压 Excitation,recommend	10~12V DC
零点温度影响 TCO	±0.02%F.S/10℃	最大激励电压 Excitation,maximum	15V DC
输出温度影响 TC SPAN	±0.02%F.S/10℃	防封等级 Protection class	IP67(0.25~0.75t);IP68(1~10t)
输入阻抗 Input impedance	400±20Ω	材质 Construction	合金钢Alloy Steel 不锈钢Stainless Steel
输出阻抗 Output impedance	352±3Ω	电缆 Cable	Length:3m(0.25~2.5t),4.2m(3~5t),5m(7.5~10t)
绝缘电阻 Insulation impedance	≥5000MΩ		Diameter: φ5mm(合金钢0.25~5t;不锈钢0.25~0.3t); φ6mm(合金钢7.5~10t,不锈钢0.5~10t)

SQB/–A/–SS Bottom Components/Weighing Module

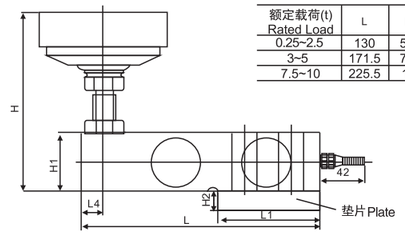

额定载荷(t) Rated Load	L	L1	L2	L3	L4	B	H	H1	H2	H3	D	D1	D2	D3
0.25~2.5	130	53.5	25.4	76.2	12.7	31.8	77.8	31.8	12	4	ϕ13	ϕ38	ϕ12	Sϕ16
3~5	171.5	72.5	38.1	95.3	19	38.1	94.1	38.1	10	6	ϕ20	ϕ50	ϕ16	Sϕ20
7.5~10	225.5	102	50.8	124	25.3	50.8	130	50.8	10	8	ϕ27	ϕ64	ϕ20	Sϕ32

总装（B）0.25~10t钢球压头 **附件** Installation B :feet

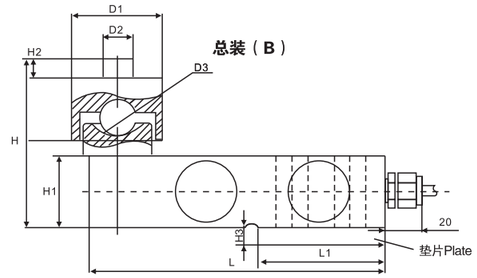

总装（B）

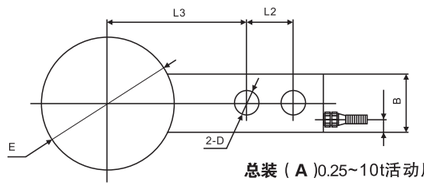

总装（A）0.25~10t活动压头附件

Installation A :feet

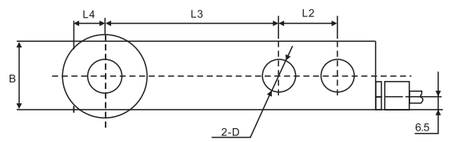

额定载荷(t) Rated Load	L	L1	L2	L3	L4	B	H	H1	H2	D	E
0.25~2.5	130	53.5	25.4	76.2	12.7	31.8	85-90	31.8	4	ϕ13	ϕ62
3~5	171.5	72.5	38.1	95.3	19	38.1	104-114	38.1	6	ϕ20	ϕ62
7.5~10	225.5	102	50.8	124	25.3	50.8	132-144	50.8	8	ϕ27	ϕ80

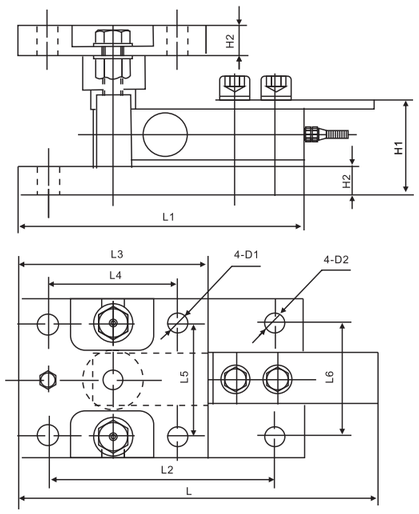

总装（D）称重模块
Installation(D) weighing module

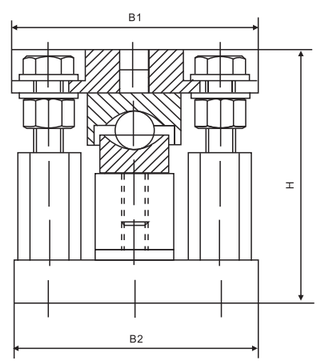

额定载荷(t) Rated Load	H	H1	H2	B1	B2	D1	D2	L	L1	L2	L3	L4	L5	L6
025,0.5,0.75 1,1.5,2,2.5	106	58	18	100	100	ϕ13	ϕ13	210	175	140	116	80	70	70
3,5	135	73	23	160	160	ϕ17	ϕ17	270	235	200	150	100	90	90
7.5,10	186.3	93.3	38(上) 28.5(下)	180	180	ϕ26	ϕ26	345.2	310	250	210.4	150.4	110	110

0.25~5t称重模块
Weighing module installation

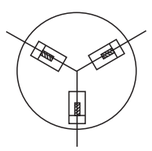

径向安装Radial mounting

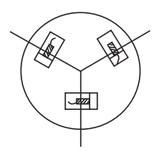

切向安装Cutting mounting

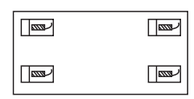

矩形安装Rectang mounting

SBRB Loadcell

SBRB

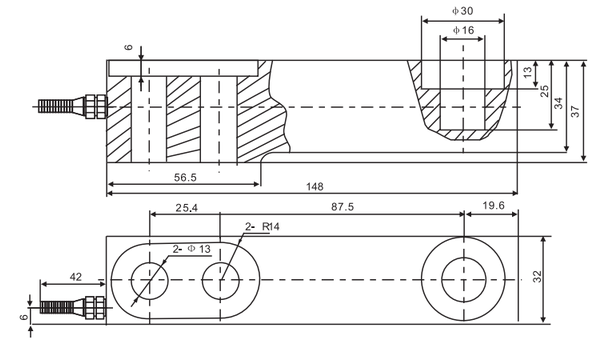

叉车秤、地上衡、配料秤、低平面台秤
Forklift scale,floor scale,blending scale,low platform scale

TECHNICAL PARAMETER

4Wires:Exc+(红,Red);Exc-(黑,Black);Sig+(绿,Green);Sig-(白,White)

额定载荷 Rated capacities(Emax)	1,2t	温度补偿范围 Temperature range, compensated	–10℃~+40℃
灵敏度 Sensitivity	2.0±0.002mV/V	工作温度范围 Temperature range, operating	-30~+70℃
综合误差 Total error	±0.03%F.S	安全过载 Maximum safe overload	150%F.S
蠕变(30分钟)Creep error (30min)	±0.03%F.S	极限过载 Ultimate overload	200%F.S
零点平衡 Zero balance	±1%F.S	推荐激励电压 Excitation,recommend	10~12V DC
零点温度影响 TCO	±0.02%F.S/10℃	最大激励电压 Excitation,maximum	15V DC
输出温度影响 TC SPAN	±0.02%F.S/10℃	防封等级 Protection class	IP67
输入阻抗 Input impedance	400±20Ω	材质 Construction	合金钢Alloy Steel
输出阻抗 Output impedance	352±2Ω	电缆 Cable	Length:1.4m
绝缘电阻 Insulation impedance	≥5000MΩ		Diameter: ϕ5mm

SQBC–A/–ASS Loadcell

SQBC–A/–ASS

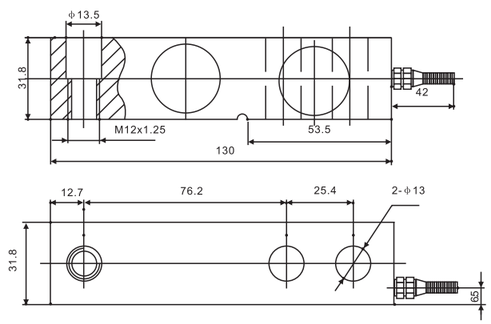

地上衡、配料控制系统、平面台秤
Floor scale,blending control system,low platform scale

TECHNICAL PARAMETER

4Wires:Exc+(红,Red);Exc-(黑,Black);Sig+(绿,Green);Sig-(白,White)

额定载荷 Rated capacities(Emax)	0.5,0.75, 1,1.5,2,2.5t	温度补偿范围 Temperature range, compensated	–10℃~+40℃
灵敏度 Sensitivity	3.0±0.003mV/V;2.0±0.002mV/V（0.5t）	工作温度范围 Temperature range, operating	-30~+70℃
综合误差 Total error	±0.03%F.S(合金钢Alloy Steel);±0.05%F.S(不锈钢Stainless Steel)	安全过载 Maximum safe overload	150%F.S
蠕变(30分钟)Creep error (30min)	±0.02%F.S ,±0.03%F.S	极限过载 Ultimate overload	180%F.S
零点平衡 Zero balance	±1%F.S	推荐激励电压 Excitation,recommend	10~12V DC
零点温度影响 TCO	±0.02%F.S/10℃	最大激励电压 Excitation,maximum	15V DC
输出温度影响 TC SPAN	±0.02%F.S/10℃	防封等级 Protection class	IP67(0.5~0.75t);IP68(1~2.5t)
输入阻抗 Input impedance	400±20Ω	材质 Construction	合金钢Alloy Steel 不锈钢Stainless Steel
输出阻抗 Output impedance	352±3Ω	电缆 Cable	Length:3m
绝缘电阻 Insulation impedance	≥5000MΩ		Diameter: ϕ6mm

SQBL-A/-ASS/ Loadcell

SQBL-A/-ASS

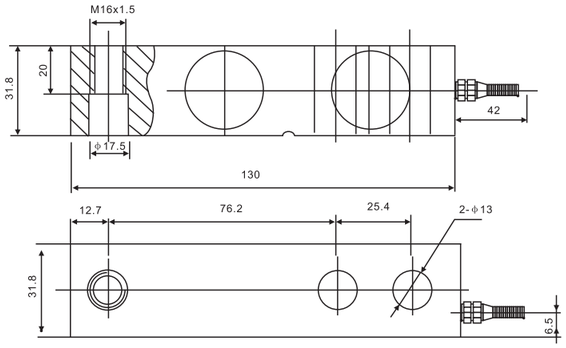

地上衡、配料控制系统、平面台秤
Floor scale,blending control system,low platform scale

TECHNICAL PARAMETER| 4Wires:Exc+(红,Red);Exc-(黑,Black);Sig+(绿,Green);Sig-(白,White)

额定载荷 Rated capacities(Emax)	1,1.5,2,2.5t	温度补偿范围 Temperature range, compensated	–10℃~+40℃
灵敏度 Sensitivity	3.0±0.003mV/V	工作温度范围 Temperature range, operating	-30~+70℃
综合误差 Total error	±0.03%F.S(合金钢Alloy Steel);±0.05%F.S(不锈钢Stainless Steel)	安全过载 Maximum safe overload	150%F.S
蠕变(30分钟)Creep error (30min)	±0.02%F.S ,±0.03%F.S	极限过载 Ultimate overload	180%F.S
零点平衡 Zero balance	±1%F.S	推荐激励电压 Excitation,recommend	10~12V DC
零点温度影响 TCO	±0.02%F.S/10℃	最大激励电压 Excitation,maximum	15V DC
输出温度影响 TC SPAN	±0.02%F.S/10℃	防封等级 Protection class	IP68
输入阻抗 Input impedance	400±20Ω	材质 Construction	合金钢Alloy Steel 不锈钢Stainless Steel
输出阻抗 Output impedance	352±3Ω	电缆 Cable	Length:3m
绝缘电阻 Insulation impedance	≥5000MΩ		Diameter: ϕ5mm(合金钢); ϕ6mm(不锈钢)

SQBB-A/-SS/-ASS Loadcell

SQBB-A/-SS/-ASS

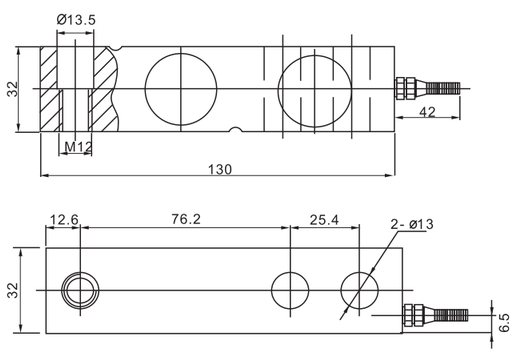

叉车秤、配料控制系统、平面台秤
Forklift scale,blending control system,low platform scale

TECHNICAL PARAMETER| 4Wires:Exc+(红,Red);Exc-(黑,Black);Sig+(绿,Green);Sig-(白,White)

额定载荷 Rated capacities(Emax)	0.5,1,2t	温度补偿范围 Temperature range, compensated	–10℃~+40℃
灵敏度 Sensitivity	2.0±0.002mV/V	工作温度范围 Temperature range, operating	-30~+70℃
综合误差 Total error	±0.05%F.S	安全过载 Maximum safe overload	150%F.S
蠕变(30分钟)Creep error (30min)	±0.02%F.S ,±0.03%F.S	极限过载 Ultimate overload	180%F.S
零点平衡 Zero balance	±1%F.S	推荐激励电压 Excitation,recommend	10~12V DC
零点温度影响 TCO	±0.02%F.S/10℃	最大激励电压 Excitation,maximum	15V DC
输出温度影响 TC SPAN	±0.02%F.S/10℃	防封等级 Protection class	IP67(0.5t);IP68(1~2t)
输入阻抗 Input impedance	400±20Ω	材质 Construction	合金钢Alloy Steel 不锈钢Stainless Steel
输出阻抗 Output impedance	352±3Ω	电缆 Cable	Length:3m
绝缘电阻 Insulation impedance	≥5000MΩ		Diameter: ϕ6mm

SQBK-A Loadcell

SQBK-A

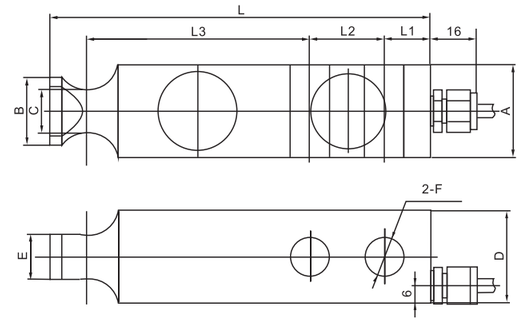

额定载荷(t) Rated Load	L	L1	L2	L3	A	B	C	D	E	F
1~2.5	130	15.8	25.4	76.2	32	ϕ23.4	ϕ15.2	32	15.8	ϕ13.5
3~5	171.5	19	38.5	93.5	38	ϕ30.5	ϕ21.8	38	22.9	ϕ20

模块附件 *(Diagram)*

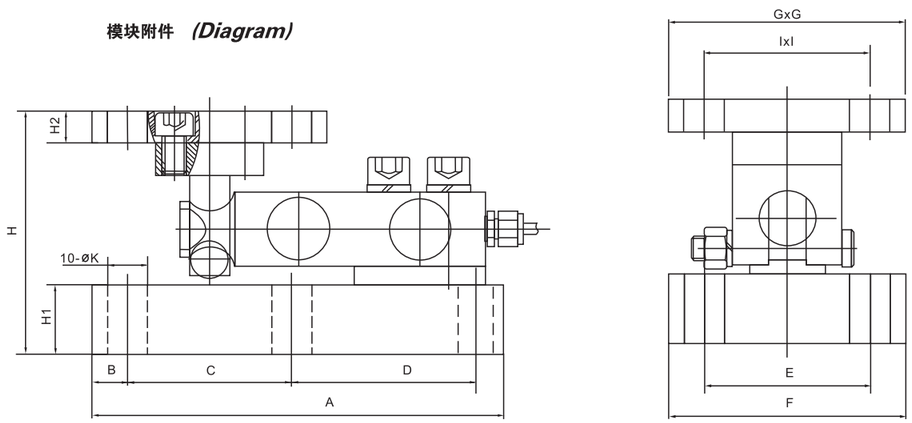

额定载荷(t) Rated Load	A	B	C	D	E/I	F/G	H1	H2	H	K
1~2.5	175	15	70	75	70	100	30	14	105	17
3~5	236	20	90	106	90	130	35	20	132	21

料罐秤、配料秤
Hopper scale,blending scale

TECHNICAL PARAMETER| 4Wires:Exc+(红,Red);Exc-(黑,Black);Sig+(绿,Green);Sig-(白,White)

额定载荷 Rated capacities(Emax)	1,2,2.5,3,5t	温度补偿范围 Temperature range, compensated	–10℃~+40℃
灵敏度 Sensitivity	3.0±0.003mV/V	工作温度范围 Temperature range, operating	-30~+70℃
综合误差 Total error	±0.05%F.S	安全过载 Maximum safe overload	150%F.S
蠕变(30分钟)Creep error (30min)	±0.03%F.S	极限过载 Ultimate overload	180%F.S
零点平衡 Zero balance	±1%F.S	推荐激励电压 Excitation,recommend	10~12V DC
零点温度影响 TCO	±0.02%F.S/10℃	最大激励电压 Excitation,maximum	15V DC
输出温度影响 TC SPAN	±0.02%F.S/10℃	防封等级 Protection class	IP68
输入阻抗 Input impedance	400±20Ω	材质 Construction	合金钢Alloy Steel
输出阻抗 Output impedance	352±3Ω	电缆 Cable	Length:5m
绝缘电阻 Insulation impedance	≥5000MΩ		Diameter: ϕ5mm

SQBG-A Loadcell

SQBG-A

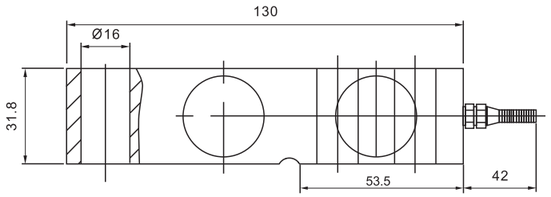

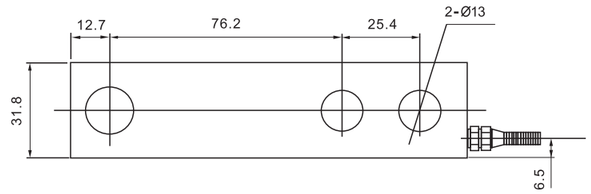

叉车秤、配料控制系统、平面台秤
Forklift scale,blending control system,platform scale

TECHNICAL PARAMETER| 4Wires:Exc+(红,Red);Exc-(黑,Black);Sig+(绿,Green);Sig-(白,White)

额定载荷 Rated capacities(Emax)	2t	温度补偿范围 Temperature range, compensated	–10℃~+40℃
灵敏度 Sensitivity	3.0±0.003mV/V	工作温度范围 Temperature range, operating	-30~+70℃
综合误差 Total error	±0.03%F.S	安全过载 Maximum safe overload	150%F.S
蠕变(30分钟)Creep error (30min)	±0.02%F.S ,±0.03%F.S	极限过载 Ultimate overload	180%F.S
零点平衡 Zero balance	±1%F.S	推荐激励电压 Excitation,recommend	10~12V DC
零点温度影响 TCO	±0.02%F.S/10℃	最大激励电压 Excitation,maximum	15V DC
输出温度影响 TC SPAN	±0.02%F.S/10℃	防封等级 Protection class	IP68
输入阻抗 Input impedance	400±20Ω	材质 Construction	合金钢Alloy Steel
输出阻抗 Output impedance	352±3Ω	电缆 Cable	Length:3m
绝缘电阻 Insulation impedance	≥5000MΩ		Diameter: Φ6mm

SQBE Loadcell

SQBE

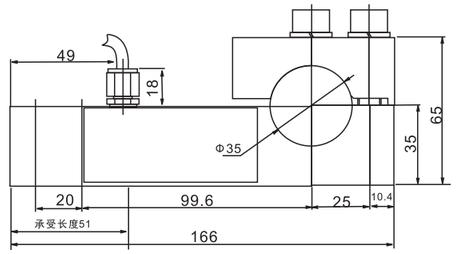

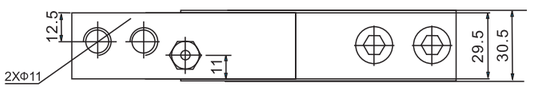

工业测力场合、机械设备计量
Industry tension-testing,mechanism counting equipment

TECHNICAL PARAMETER| 4Wires:Exc+(红,Red);Exc-(黑,Black);Sig+(绿,Green);Sig-(白,White)

额定载荷 Rated capacities(Emax)	100,250,850kg	温度补偿范围 Temperature range, compensated	–10℃~+40℃
灵敏度 Sensitivity	2.0±0.01mV/V	工作温度范围 Temperature range, operating	-30~+70℃
综合误差 Total error	±0.2%F.S	安全过载 Maximum safe overload	150%F.S
蠕变(30分钟)Creep error (30min)	±0.05%F.S	极限过载 Ultimate overload	200%F.S
零点平衡 Zero balance	±1%F.S	推荐激励电压 Excitation,recommend	10~12V DC
零点温度影响 TCO	±0.02%F.S/10℃	最大激励电压 Excitation,maximum	15V DC
输出温度影响 TC SPAN	±0.02%F.S/10℃	防封等级 Protection class	IP67
输入阻抗 Input impedance	400±20Ω	材质 Construction	合金钢Alloy Steel
输出阻抗 Output impedance	352±3Ω	电缆 Cable	Length:1.5m
绝缘电阻 Insulation impedance	≥5000MΩ		Diameter: Φ5mm

SQBEB-A Loadcell

SQBEB-A

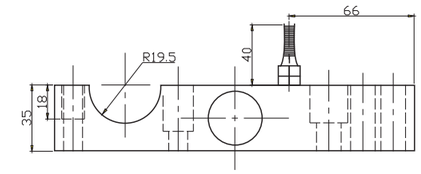

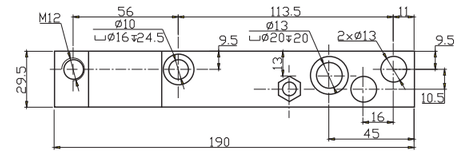

工业测力场合、纺织机械
Industrial load testing,Textile Machinery

TECHNICAL PARAMETER| 4Wires:Exc+(红,Red);Exc-(黑,Black);Sig+(绿,Green);Sig-(白,White)

额定载荷 Rated capacities(Emax)	850kg	温度补偿范围 Compensated temp range	–10℃~+40℃
灵敏度 Sensitivity	2.0±0.01mV/V	工作温度范围 Operating temp range	-30~+70℃
综合误差 Total error	±0.1%F.S	安全过载 Safe over load	150%F.S
蠕变（30分钟）Creep erro (30min)	±0.05%F.S	极限过载 Ultimate over load	200%F.S
零点平衡 Zero balance	±1%F.S	推荐激励电压 Recommend excitation	10~12V DC
零点温度影响 TCO	±0.02%F.S/10℃	最大激励电压 Max excitation	15V DC
输出温度影响 TC SPAN	±0.02%F.S/10℃	密封等级 Environmental protection	IP68
输入阻抗 Input impedance	400±20Ω	材质 Material	合金钢Alloy Steel
输出阻抗 Output impedance	352±3Ω	电缆 Cable	Length:1.5m
绝缘电阻 Insulation impedance	≥5000MΩ		Diameter: Φ6mm

SQC-A/-ASS Loadcell

SQC-A/-ASS

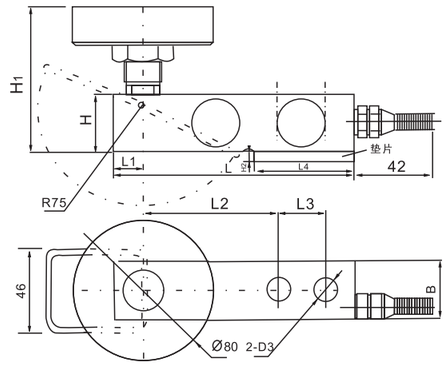

额定载荷(t) Rated Load	L	L1	L2	L3	L4	H/B	D3	H1	H2
1,1.5,2,2.5	130	14.7	74.2	25.4	53.5	31.8	Φ13	51	4
3,5	171.5	19	95.3	38.1	72.5	38.1	Φ20	57.3	6

地上衡、配料秤、低平面台秤
Floor scale,blending scale,low platform scale

TECHNICAL PARAMETER| 4Wires:Exc+(红,Red);Exc-(黑,Black);Sig+(绿,Green);Sig-(白,White)

额定载荷 Rated capacities(Emax)	1,1.5,2,2.5,3,5t	温度补偿范围 Temperature range, compensated	–10℃~+40℃
灵敏度 Sensitivity	3.0±0.003mV/V	工作温度范围 Temperature range, operating	-30~+70℃
综合误差 Total error	±0.05%F.S	安全过载 Maximum safe overload	150%F.S
蠕变(30分钟)Creep error (30min)	±0.02%F.S ,±0.03%F.S	极限过载 Ultimate overload	200%F.S
零点平衡 Zero balance	±1%F.S	推荐激励电压 Excitation,recommend	10~12V DC
零点温度影响 TCO	±0.02%F.S/10℃	最大激励电压 Excitation,maximum	15V DC
输出温度影响 TC SPAN	±0.02%F.S/10℃	防封等级 Protection class	IP68
输入阻抗 Input impedance	400±20Ω	材质 Construction	合金钢Alloy Steel
输出阻抗 Output impedance	352±3Ω	电缆 Cable	Length:5m
绝缘电阻 Insulation impedance	≥5000MΩ		Diameter: Φ5mm(1~2.5t);Φ6mm(3~5t);

CB Loadcell

CB

额定载荷(t) Rated Load	H
0.1~0.5	15.9
0.75,1	19.1
1.5,2	25.4

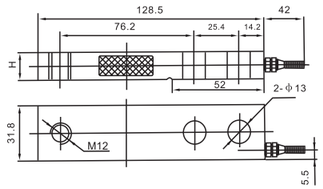

额定载荷(t) Rated Load	H
0.1~0.5	15.9
0.75,1	19.1
1.5,2	25.4

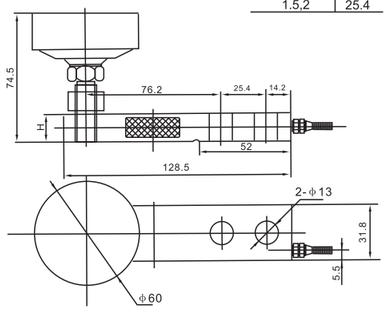

地上衡、配料秤、低平面台秤
Floor scale,blending scale,low platform scale

TECHNICAL PARAMETER| 4Wires:Exc+(蓝,Blue);Exc-(黑,Black);Sig+(白,White);Sig-(红,Red)

额定载荷 Rated capacities(Emax)	0.1,0.2,0.3,0.5,0.75,1,1.5,2t	温度补偿范围 Temperature range, compensated	–10℃~+40℃
灵敏度 Sensitivity	2.0±0.003mV/V	工作温度范围 Temperature range, operating	-30~+70℃
综合误差 Total error	±0.03%F.S ,±0.05%F.S	安全过载 Maximum safe overload	120%F.S
蠕变(30分钟)Creep error (30min)	±0.02%F.S ,±0.03%F.S	极限过载 Ultimate overload	180%F.S
零点平衡 Zero balance	±1%F.S	推荐激励电压 Excitation,recommend	10~12V DC
零点温度影响 TCO	±0.02%F.S/10℃	最大激励电压 Excitation,maximum	15V DC
输出温度影响 TC SPAN	±0.02%F.S/10℃	防封等级 Protection class	IP66
输入阻抗 Input impedance	400±20Ω	材质 Construction	合金钢Alloy Steel
输出阻抗 Output impedance	352±3Ω	电缆 Cable	Length:3m
绝缘电阻 Insulation impedance	≥5000MΩ		Diameter: ϕ5mm

CBF Loadcell

CBF

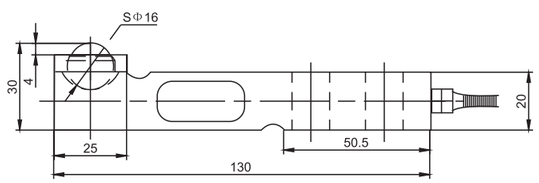

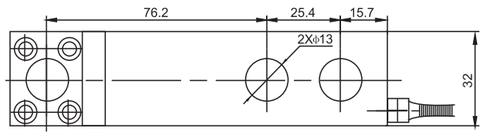

地上衡、配料秤、低平面台秤
Floor scale,blending scale,low platform scale

TECHNICAL PARAMETER| 4Wires:Exc+(红,Red);Exc-(黑,Black);Sig+(绿,Green);Sig-(白,White)

额定载荷 Rated capacities(Emax)	1,2t	温度补偿范围 Temperature range, compensated	–10℃~+40℃
灵敏度 Sensitivity	2.0±0.003mV/V	工作温度范围 Temperature range, operating	-30~+70℃
综合误差 Total error	±0.03%F.S ,±0.05%F.S	安全过载 Maximum safe overload	120%F.S
蠕变(30分钟)Creep error (30min)	±0.03%F.S	极限过载 Ultimate overload	180%F.S
零点平衡 Zero balance	±1%F.S	推荐激励电压 Excitation,recommend	10~12V DC
零点温度影响 TCO	±0.03%F.S/10℃	最大激励电压 Excitation,maximum	15V DC
输出温度影响 TC SPAN	±0.03%F.S/10℃	防封等级 Protection class	IP66
输入阻抗 Input impedance	400±20Ω	材质 Construction	合金钢Alloy Steel
输出阻抗 Output impedance	352±3Ω	电缆 Cable	Length:4m
绝缘电阻 Insulation impedance	≥5000MΩ		Diameter: ϕ5mm

CBK/–SS Loadcell

CBK/–SS

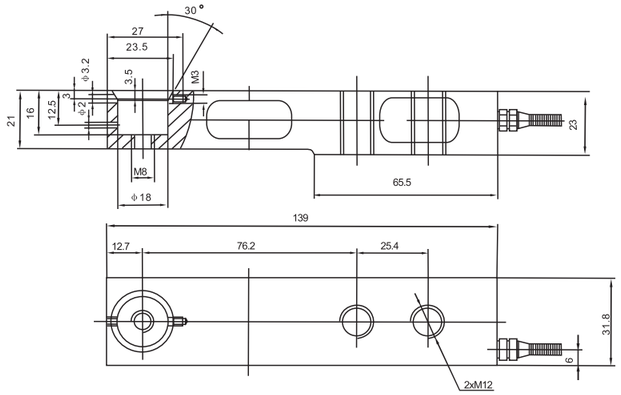

平台秤、配料控制系统、低平面台秤
Platform scale,blending scale,packing scale,Low platform scale

TECHNICAL PARAMETER| 4Wires:Exc+(绿,Green);Exc-(黑,Black);Sig+(白,White);Sig-(红,Red)

额定载荷 Rated capacities(Emax)	0.17,0.25,0.4,0.7,1.3,2t	温度补偿范围 Temperature range, compensated	–10℃~+40℃
灵敏度 Sensitivity	2.0±0.003mV/V	工作温度范围 Temperature range, operating	-30~+70℃
综合误差 Total error	±0.03%F.S ,±0.05%F.S	安全过载 Maximum safe overload	120%F.S
蠕变(30分钟)Creep error (30min)	±0.03%F.S ,±0.05%F.S	极限过载 Ultimate overload	200%F.S
零点平衡 Zero balance	±1%F.S	推荐激励电压 Excitation,recommend	10~12V DC
零点温度影响 TCO	±0.03%F.S/10℃	最大激励电压 Excitation,maximum	15V DC
输出温度影响 TC SPAN	±0.03%F.S/10℃	防封等级 Protection class	IP66
输入阻抗 Input impedance	1106±10Ω	材质 Construction	合金钢Alloy Steel 不锈钢Stainless Steel
输出阻抗 Output impedance	1000±5Ω	电缆 Cable	Length:3m
绝缘电阻 Insulation impedance	≥5000MΩ		Diameter: ϕ5mm

SBTE–A Loadcell

SBTE–A

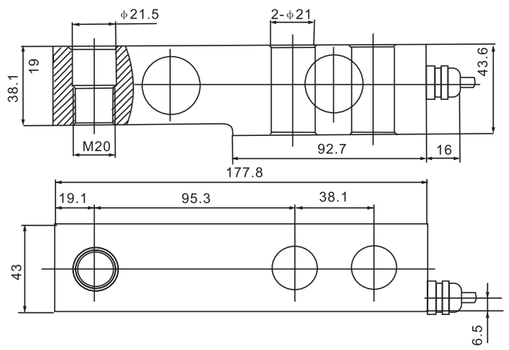

地上衡、配料秤、平台秤
Floor scale,blending scale,low platform scale

TECHNICAL PARAMETER| 4Wires:Exc+(红,Red);Exc-(黑,Black);Sig+(绿,Green);Sig-(白,White)

额定载荷 Rated capacities(Emax)	5t	温度补偿范围 Temperature range, compensated	–10℃~+40℃
灵敏度 Sensitivity	2.0±0.002mV/V	工作温度范围 Temperature range, operating	-30~+70℃
综合误差 Total error	±0.05%F.S	安全过载 Maximum safe overload	200%F.S
蠕变(30分钟)Creep error (30min)	±0.03%F.S	极限过载 Ultimate overload	300%F.S
零点平衡 Zero balance	±1%F.S	推荐激励电压 Excitation,recommend	10~12V DC
零点温度影响 TCO	±0.02%F.S/10℃	最大激励电压 Excitation,maximum	15V DC
输出温度影响 TC SPAN	±0.02%F.S/10℃	防封等级 Protection class	IP68
输入阻抗 Input impedance	1106±5Ω	材质 Construction	合金钢Alloy Steel
输出阻抗 Output impedance	1000±5Ω	电缆 Cable	Length:4.5m
绝缘电阻 Insulation impedance	≥5000MΩ		Diameter: ϕ5mm

SBB Loadcell

SBB

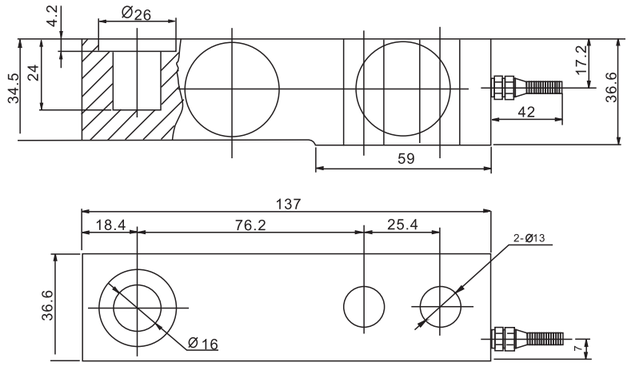

叉车秤
Forklift scale

TECHNICAL PARAMETER| 4Wires:Exc+(红,Red);Exc-(黑,Black);Sig+(绿,Green);Sig-(白,White)

额定载荷 Rated capacities(Emax)	0.5,1, 2t	温度补偿范围 Temperature range, compensated	–10℃~+40℃
灵敏度 Sensitivity	2.0±0.002mV/V;1.7±0.002mV/V（0.5t）	工作温度范围 Temperature range, operating	-30~+70℃
综合误差 Total error	±0.03%F.S;±0.05%F.S	安全过载 Maximum safe overload	150%F.S
蠕变(30分钟)Creep error (30min)	±0.02%F.S ;±0.03%F.S	极限过载 Ultimate overload	200%F.S
零点平衡 Zero balance	±1%F.S	推荐激励电压 Excitation,recommend	10~12V DC
零点温度影响 TCO	±0.02%F.S/10℃	最大激励电压 Excitation,maximum	15V DC
输出温度影响 TC SPAN	±0.02%F.S/10℃	防封等级 Protection class	IP67
输入阻抗 Input impedance	400±20Ω	材质 Construction	合金钢Alloy Steel
输出阻抗 Output impedance	352±3Ω	电缆 Cable	Length:3.5m
绝缘电阻 Insulation impedance	≥5000MΩ		Diameter: ϕ6mm

SBC–A/SBF–A Loadcell

SBC–A/SBF–A

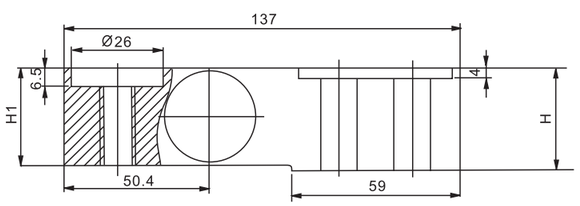

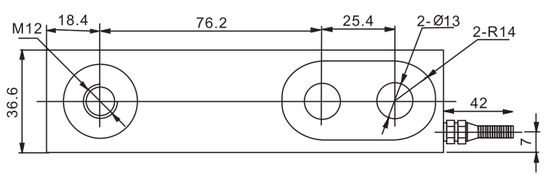

额定载荷(t) Rated Load	SBC	SBF
H	36.6	31
H1	34.5	30

叉车秤、低平面台秤、平台秤
Forklift scale,low platform scale,platform scale

TECHNICAL PARAMETER| 4Wires:Exc+(红,Red);Exc-(黑,Black);Sig+(绿,Green);Sig-(白,White)

额定载荷 Rated capacities(Emax)	1t	温度补偿范围 Temperature range, compensated	–10℃~+40℃
灵敏度 Sensitivity	2.0±0.002mV/V	工作温度范围 Temperature range, operating	-30~+70℃
综合误差 Total error	±0.05%F.S	安全过载 Maximum safe overload	150%F.S
蠕变(30分钟)Creep error (30min)	±0.03%F.S	极限过载 Ultimate overload	300%F.S
零点平衡 Zero balance	±1%F.S	推荐激励电压 Excitation,recommend	10~12V DC
零点温度影响 TCO	±0.02%F.S/10℃	最大激励电压 Excitation,maximum	15V DC
输出温度影响 TC SPAN	±0.02%F.S/10℃	防封等级 Protection class	IP68
输入阻抗 Input impedance	400±20Ω	材质 Construction	合金钢Alloy Steel
输出阻抗 Output impedance	352±3Ω	电缆 Cable	Length: 1.4m
绝缘电阻 Insulation impedance	≥5000MΩ		Diameter: ϕ6mm

SQBU/SQBU–A/–ASS Loadcell

SQBU/SQBU–A/–ASS

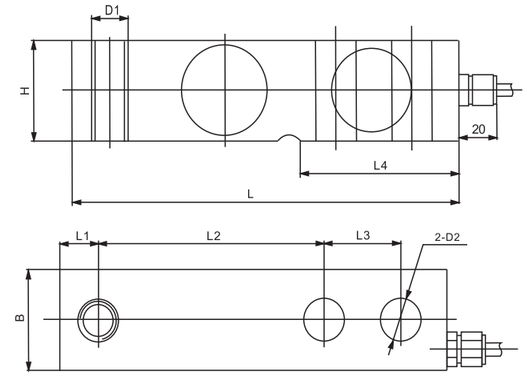

额定载荷(t) Rated Load	L	L1	L2	L3	L4	H/B	D1	D2
0.5,0.75,1,1.5,2,2.5	130	12.7	76.2	25.4	53.5	31.8	M12	ϕ13
3,5	171.5	19	95.3	38.1	72.5	38.1	M18x1.5	ϕ20

地上衡、配料秤、平面台秤
Floor scale,blending scale, platform scale

TECHNICAL PARAMETER| 4Wires:Exc+(红,Red);Exc-(黑,Black);Sig+(绿,Green);Sig-(白,White)

额定载荷 Rated capacities(Emax)	0.5,0.75,1,1.5,2,2.5,3,5t	温度补偿范围 Temperature range, compensated	–10℃~+40℃
灵敏度 Sensitivity	3.0±0.003mV/V	工作温度范围 Temperature range, operating	-30~+70℃
综合误差 Total error	±0.03%F.S(合金钢Alloy Steel);±0.05%F.S(不锈钢Stainless Steel)	安全过载 Maximum safe overload	150%F.S
蠕变(30分钟)Creep error (30min)	±0.03%F.S	极限过载 Ultimate overload	200%F.S
零点平衡 Zero balance	±1%F.S	推荐激励电压 Excitation,recommend	10~12V DC
零点温度影响 TCO	±0.02%F.S/10℃	最大激励电压 Excitation,maximum	15V DC
输出温度影响 TC SPAN	±0.02%F.S/10℃	防封等级 Protection class	IP67(0.5~0.75t);IP68(1~5t)
输入阻抗 Input impedance	400±20Ω	材质 Construction	合金钢Alloy Steel 不锈钢Stainless Steel
输出阻抗 Output impedance	352±3Ω	电缆 Cable	Length: 3m(0.5~2.5t),4.2m(3~5t)
绝缘电阻 Insulation impedance	≥5000MΩ		Diameter: ϕ6mm

SQBY/SQBY–A/–ASS Loadcell

SQBY/SQBY–A/–ASS

OIML

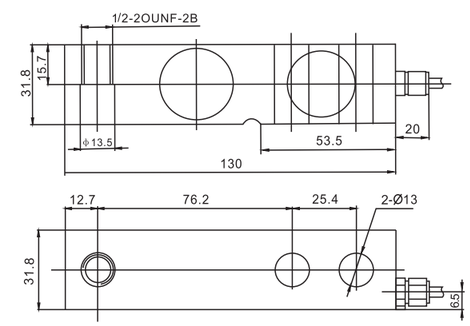

地上衡、配料秤、平面台秤
Floor scale,blending scale, platform scale

TECHNICAL PARAMETER| 4Wires:Exc+(红,Red);Exc-(黑,Black);Sig+(绿,Green);Sig-(白,White)

额定载荷 Rated capacities(Emax)	1,2,2.5,4klb	温度补偿范围 Temperature range, compensated	–10℃~+40℃
灵敏度 Sensitivity	3.0±0.003mV/V	工作温度范围 Temperature range, operating	-30~+70℃
精度等级 Accuracy class	Ⅲ L 5000	安全过载 Maximum safe overload	150%F.S
		极限过载 Ultimate overload	200%F.S
零点平衡 Zero balance	±1%F.S	推荐激励电压 Excitation,recommend	10~12V DC
零点温度影响 TCO	±0.02%F.S/10℃	最大激励电压 Excitation,maximum	15V DC
输出温度影响 TC SPAN	±0.02%F.S/10℃	防封等级 Protection class	IP67(1klb);IP68(2~4klb)
输入阻抗 Input impedance	400±20Ω	材质 Construction	合金钢Alloy Steel, 不锈钢Stainless Steel
输出阻抗 Output impedance	352±3Ω	电缆 Cable	Length: 3m
绝缘电阻 Insulation impedance	≥5000MΩ		Diameter: ϕ6mm

SQCB-A Loadcell

SQCB-A

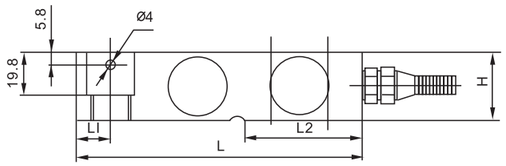

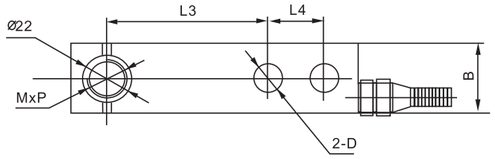

额定载荷(t) Rated Load	B	D	H	L	L1	L2	L3	L4	MxP
1,1.5,2,2.5	31.8	ϕ13	31.8	130	14.7	53.5	74.2	25.4	M16x1.5
3,5	38.1	ϕ20	38.1	171.5	19	72.5	95.3	38.1	M18x1.5

地上衡、配料秤、平面台秤
Floor scale,blending scale, platform scale

TECHNICAL PARAMETER| 4Wires:Exc+(红,Red);Exc-(黑,Black);Sig+(绿,Green);Sig-(白,White)

额定载荷 Rated capacities(Emax)	1,1.5,2,2.5,3,5t	温度补偿范围 Temperature range, compensated	–10℃~+40℃
灵敏度 Sensitivity	2.0±0.002mV/V	工作温度范围 Temperature range, operating	-30~+70℃
综合误差 Total error	±0.05%F.S	安全过载 Maximum safe overload	150%F.S
蠕变(30分钟)Creep error (30min)	±0.03%F.S	极限过载 Ultimate overload	200%F.S
零点平衡 Zero balance	±1%F.S	推荐激励电压 Excitation,recommend	10~12V DC
零点温度影响 TCO	±0.02%F.S/10℃	最大激励电压 Excitation,maximum	15V DC
输出温度影响 TC SPAN	±0.02%F.S/10℃	防封等级 Protection class	IP67
输入阻抗 Input impedance	400±20Ω	材质 Construction	合金钢Alloy Steel
输出阻抗 Output impedance	352±3Ω	电缆 Cable	Length:5m
绝缘电阻 Insulation impedance	≥5000MΩ		Diameter: ϕ5mm(1~2.5t); ϕ6mm(3~5t)

SBZ/SBZ-A Loadcell

SBZ/SBZ-A

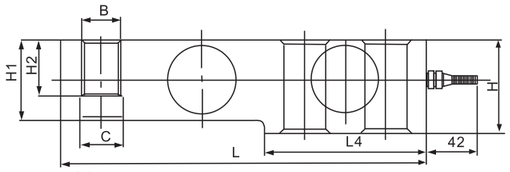

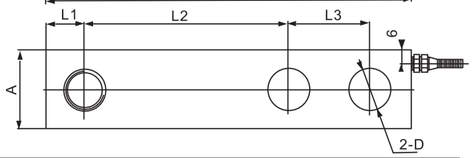

额定载荷(t) Rated Load	L	L1	L2	L3	L4	A	B	C	D	H	H1	H2
0.5,1,2	132	14.7	76.2	25.4	56.5	32	M12	ϕ13.8	ϕ13.5	33.5	31.5	15.7
3,5	171.5	19	95.3	38.1	76.2	38	M18x1.5	ϕ20	ϕ20	44.5	38	26

地上衡、配料秤、平面台秤
Floor scale,blending scale, platform scale

TECHNICAL PARAMETER| 4Wires:Exc+(红,Red);Exc-(黑,Black);Sig+(绿,Green);Sig-(白,White)

额定载荷 Rated capacities(Emax)	0.5,1,2,3,5t	温度补偿范围 Temperature range, compensated	–10℃~+40℃
灵敏度 Sensitivity	2.0±0.002mV/V	工作温度范围 Temperature range, operating	-30~+70℃
综合误差 Total error	±0.03%F.S;±0.05%F.S	安全过载 Maximum safe overload	150%F.S
蠕变(30分钟)Creep error (30min)	±0.03%F.S	极限过载 Ultimate overload	200%F.S
零点平衡 Zero balance	±1%F.S	推荐激励电压 Excitation,recommend	10~12V DC
零点温度影响 TCO	±0.02%F.S/10℃	最大激励电压 Excitation,maximum	15V DC
输出温度影响 TC SPAN	±0.02%F.S/10℃	防封等级 Protection class	IP67(0.5t);IP68(1~5t)
输入阻抗 Input impedance	400±20Ω	材质 Construction	合金钢Alloy Steel
输出阻抗 Output impedance	352±2Ω	电缆 Cable	Length:3m(0.5~2t),5m(3t),6m(5t)
绝缘电阻 Insulation impedance	≥5000MΩ		Diameter: ϕ5mm

SBWJ Loadcell

SBWJ

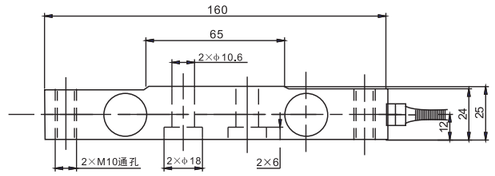

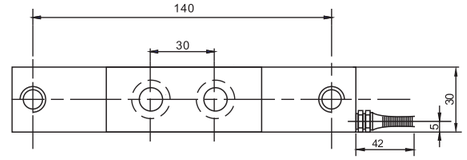

叉车秤、低平面台秤
Forklift scale,low platform scale

TECHNICAL PARAMETER| 4Wires:Exc+(红,Red);Exc-(黑,Black);Sig+(绿,Green);Sig-(白,White)

额定载荷 Rated capacities(Emax)	1,2t	温度补偿范围 Temperature range, compensated	–10℃~+40℃
灵敏度 Sensitivity	2.0±0.002mV/V	工作温度范围 Temperature range, operating	-30~+70℃
综合误差 Total error	±0.05%F.S	安全过载 Maximum safe overload	120%F.S
蠕变(30分钟)Creep error (30min)	±0.03%F.S	极限过载 Ultimate overload	150%F.S
零点平衡 Zero balance	±1%F.S	推荐激励电压 Excitation,recommend	10~12V DC
零点温度影响 TCO	±0.03%F.S/10℃	最大激励电压 Excitation,maximum	15V DC
输出温度影响 TC SPAN	±0.03%F.S/10℃	防封等级 Protection class	IP67
输入阻抗 Input impedance	750±10Ω	材质 Construction	合金钢Alloy Steel
输出阻抗 Output impedance	702±3Ω	电缆 Cable	Length:5m
绝缘电阻 Insulation impedance	≥5000MΩ		Diameter: ϕ5mm

HSX-AW Loadcell

HSX-AW

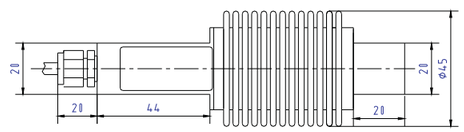

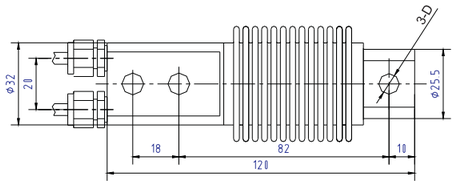

量程(kg)	50~250	300,500
D(mm)	Φ8.2	Φ10.2

料斗秤、皮带秤、配料系统
Hopper scale,belt scale,blending system

TECHNICAL PARAMETER| 4Wires:Exc+(红,Red);Exc-(黑,Black);Sig+(绿,Green);Sig-(白,White)

额定载荷 Rated capacities(Emax)	50,75,100,150,200,250,300,500kg	温度补偿范围 Temperature range, compensated	–10℃~+40℃
灵敏度 Sensitivity	2.0±0.002mV/V(双信号dual signal)	工作温度范围 Temperature range, operating	-30~+70℃
综合误差 Total error	±0.03%F.S	安全过载 Maximum safe overload	120%F.S
蠕变(30分钟)Creep error (30min)	±0.03%F.S	极限过载 Ultimate overload	150%F.S
零点平衡 Zero balance	±1%F.S	推荐激励电压 Excitation,recommend	10~12V DC
零点温度影响 TCO	±0.03%F.S/10℃	最大激励电压 Excitation,maximum	15V DC
输出温度影响 TC SPAN	±0.03%F.S/10℃	防封等级 Protection class	IP68
输入阻抗 Input impedance	400±20Ω	材质 Construction	合金钢Alloy Steel
输出阻抗 Output impedance	352±3Ω	电缆 Cable	Length:3m
绝缘电阻 Insulation impedance	≥5000MΩ		Diameter: ϕ5mm

HSXJ-A/-ASS Loadcell

HSXJ-A/-ASS

额定载荷(kg) Rated Load	5~250	300,500
D(mm)	ϕ8.2	ϕ10.2

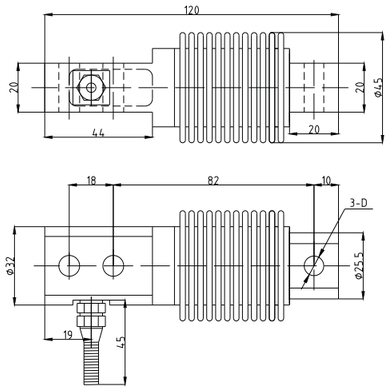

料斗秤、皮带秤、配料系统
Hopper scale,belt scale,blending system

TECHNICAL PARAMETER| 4Wires:Exc+(红,Red);Exc-(黑,Black);Sig+(绿,Green);Sig-(白,White)

额定载荷 Rated capacities(Emax)	5,10,20,30,40,50,75,100,150,200,250,300,500kg	温度补偿范围 Temperature range, compensated	–10℃~+40℃
灵敏度 Sensitivity	2.0±0.002mV/V	工作温度范围 Temperature range, operating	-30~+70℃
综合误差 Total error	±0.02%F.S,±0.03%F.S	安全过载 Maximum safe overload	120%F.S
蠕变(30分钟)Creep error (30min)	±0.02%F.S,±0.03%F.S	极限过载 Ultimate overload	150%F.S
零点平衡 Zero balance	±1%F.S	推荐激励电压 Excitation,recommend	10~12V DC
零点温度影响 TCO	±0.02%F.S/10℃	最大激励电压 Excitation,maximum	15V DC
输出温度影响 TC SPAN	±0.02%F.S/10℃	防封等级 Protection class	IP68
输入阻抗 Input impedance	400±20Ω	材质 Construction	合金钢Alloy Steel, 不锈钢Stainless Steel
输出阻抗 Output impedance	352±3Ω	电缆 Cable	Length:3m
绝缘电阻 Insulation impedance	≥5000MΩ		Diameter: ϕ5mm

HSX-A/-ASS Loadcell

HSX-A/-ASS

RoHS
OIML

额定载荷(kg) Rated Load	D
5,10,20,30,40,50,75 100,150,200,250	ϕ8.2
300,500	ϕ10.2

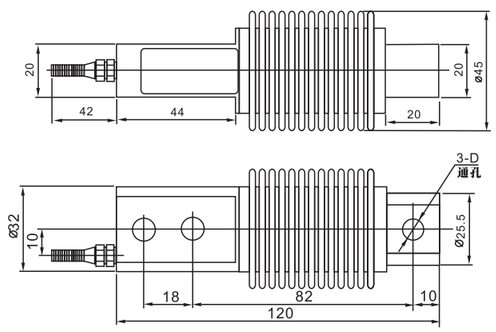

料斗秤、皮带秤、配料系统
Hopper scale
,belt scale, blending system

TECHNICAL PARAMETER| 4Wires:Exc+(红,Red);Exc-(黑,Black);Sig+(绿,Green);Sig-(白,White)

额定载荷 Rated capacities(Emax)	5,10,20,30,40,50,75,100,150,200,250,300,500kg	温度补偿范围 Temperature range, compensated	–10℃~+40℃
灵敏度 Sensitivity	2.0±0.002mV/V	工作温度范围 Temperature range, operating	-30~+70℃
精度等级 Accuracy class	C2~C5	安全过载 Maximum safe overload	120%F.S
		极限过载 Ultimate overload	150%F.S
零点平衡 Zero balance	±1%F.S	推荐激励电压 Excitation,recommend	10~12V DC
零点温度影响 TCO	±0.02%F.S/10℃	最大激励电压 Excitation,maximum	15V DC
输出温度影响 TC SPAN	±0.02%F.S/10℃	防封等级 Protection class	IP68
输入阻抗 Input impedance	400±20Ω	材质 Construction	合金钢Alloy Steel, 不锈钢Stainless Steel
输出阻抗 Output impedance	352±3Ω	电缆 Cable	Length:3m,5m(HSX-A20kg)
绝缘电阻 Insulation impedance	≥5000MΩ		Diameter: ϕ5mm

HSX-A/-ASS Weighing Module

HSX-A/-ASS

RoHS
OIML

总装D模块 (Diagram D)

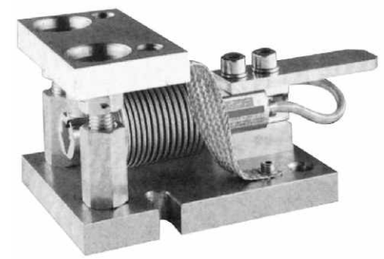

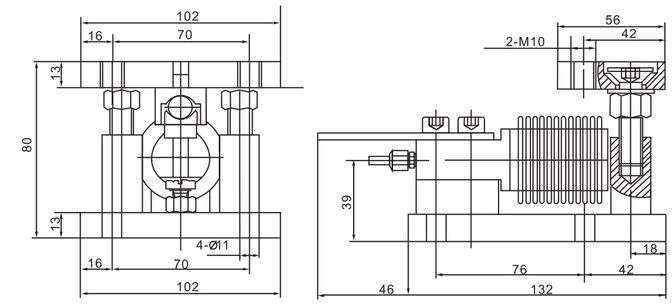

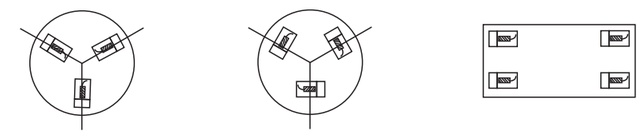

径向安装Radial installation　切向安装 Cutting installation　矩形安装 Rectangle installation

HSX总装B附件 (Diagram B)

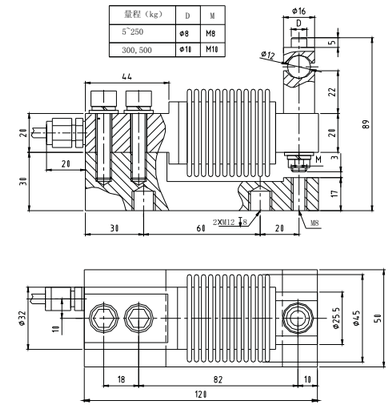

HSX-ASS总装C附件 (Diagram C)

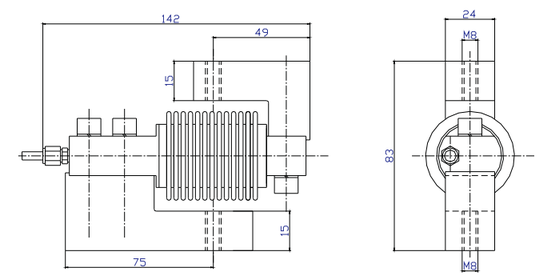

HSX总装E附件 (Diagram E)

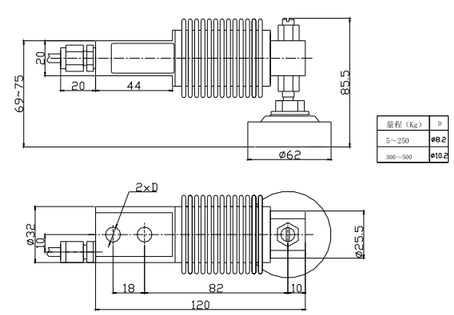

HSXB-A Loadcell

HSXB-A

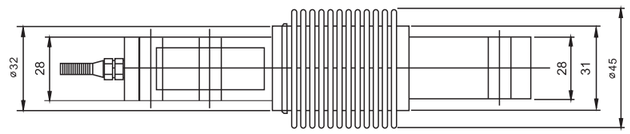

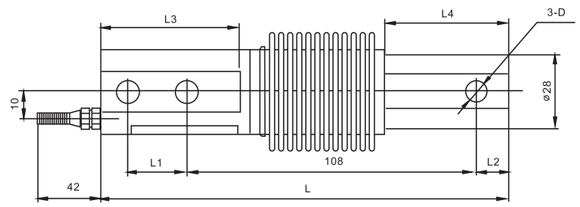

额定载荷(kg) Rated Load	L	L1	L2	L3	L4	D
25,50	152	22	12	52	42	ϕ8.5
100,200	168	28	19	62	48	ϕ11

料斗秤、皮带秤、配料系统
Hopper scale,belt scale,blending system

TECHNICAL PARAMETER| 4Wires:Exc+(红,Red);Exc-(黑,Black);Sig+(绿,Green);Sig-(白,White)

额定载荷 Rated capacities(Emax)	25,50,100,200kg	温度补偿范围 Temperature range, compensated	–10℃~+40℃
灵敏度 Sensitivity	2.0±0.002mV/V	工作温度范围 Temperature range, operating	-30~+70℃
综合误差 Total error	±0.03%F.S	安全过载 Maximum safe overload	120%F.S
蠕变(30分钟)Creep error (30min)	±0.03%F.S	极限过载 Ultimate overload	150%F.S
零点平衡 Zero balance	±1%F.S	推荐激励电压 Excitation,recommend	10~12V DC
零点温度影响 TCO	±0.02%F.S/10℃	最大激励电压 Excitation,maximum	15V DC
输出温度影响 TC SPAN	±0.02%F.S/10℃	防封等级 Protection class	IP68
输入阻抗 Input impedance	400±20Ω	材质 Construction	合金钢Alloy Steel
输出阻抗 Output impedance	352±3Ω	电缆 Cable	Length:3m
绝缘电阻 Insulation impedance	≥5000MΩ		Diameter: ϕ5mm

DE/DEC Loadcell

DE/DEC

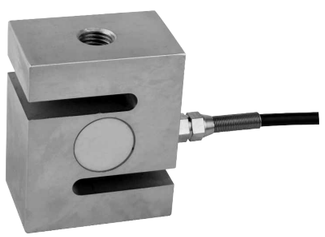

DE1~5t

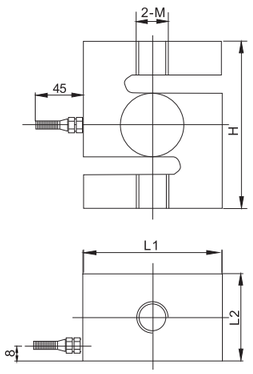

DEC 1t

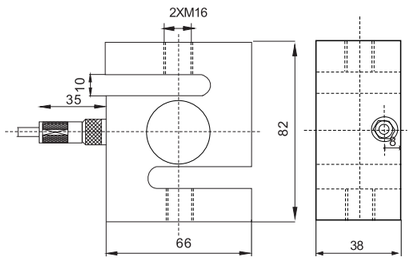

额定载荷(t) Rated Load	H	L1	L2	M
1	82	66	38	M12
1.5,2	86	70	45	M16
5	130	92	58	M20

吊钩秤、配料秤、包装秤、机电结合秤及专用测力装置
Crane scale,blending scale,packing scale, electromechanical scale,special testing device

TECHNICAL PARAMETER| 4Wires:Exc+(红,Red);Exc-(黑,Black);Sig+(绿,Green);Sig-(白,White)

额定载荷 Rated capacities(Emax)	1,1.5,2,5t	温度补偿范围 Temperature range, compensated	–10℃~+40℃
灵敏度 Sensitivity	2.0±0.002mV/V	工作温度范围 Temperature range, operating	-30~+70℃
综合误差 Total error	±0.03%F.S	安全过载 Maximum safe overload	120%F.S
蠕变(30分钟)Creep error (30min)	±0.02%F.S	极限过载 Ultimate overload	150%F.S
零点平衡 Zero balance	±1%F.S	推荐激励电压 Excitation,recommend	10~12V DC
零点温度影响 TCO	±0.02%F.S/10℃	最大激励电压 Excitation,maximum	15V DC
输出温度影响 TC SPAN	±0.02%F.S/10℃	防封等级 Protection class	IP67
输入阻抗 Input impedance	400±20Ω	材质 Construction	合金钢Alloy Steel
输出阻抗 Output impedance	352±3Ω	电缆 Cable	Length:12m(DEC1t) ;2m
绝缘电阻 Insulation impedance	≥2000MΩ		Diameter: ϕ5mm(DEC1t); ϕ6mm

总装B附件图 *(Diagram B)*

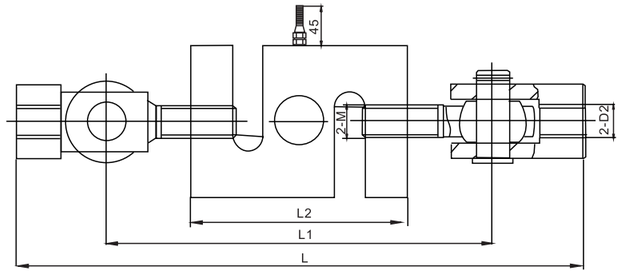

总装A附件图 *(Diagram A)*

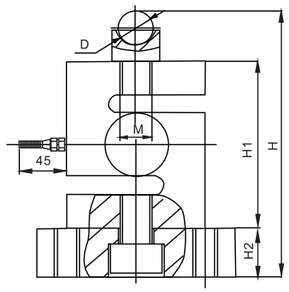

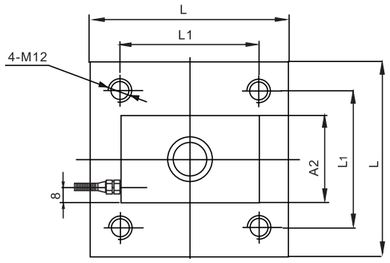

总装B附件表 *(Table B)*

额定载荷(kg) Rated Load	Lmax	L1max	L2	M	D2
1	240	160	82	M12	M12
1.5,2	261	173	86	M16	M16
5	355	235	130	M20	M24

总装A附件表 *(Table A)*

额定载荷(t) Rated Load	H	H1	H2	L	L1	A2	M	D
1	126	82	19	100	70	38	M12	ϕ16
1.5,2	136	86	24	100	70	45	M16	ϕ16
5	190	130	29	128	92	58	M20	ϕ19

DEFY/-SS Loadcell

DEFY/-SS

250lb~3klb

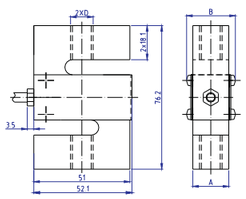

5klb~20klb

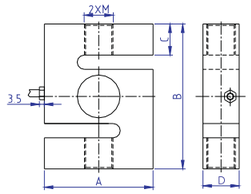

量 程	A	B	D
250lb~300lb	12.4	19.5	3/8-24 UNF-2B
500lb~1.5klb	19.1	26	1/2-20 UNF-2B
2~3klb	25.4	32.5	1/2-20 UNF-2B

量程(klb)	A	B	C	D	M
5~7.5	76.2	107.9	25	25.4	3/4-16 UNF-2B
10	88.9	120.7	31	25.4	3/4-16 UNF-2B
20	127	178	38	51	1 1/4 -12UNF-2B

吊钩秤、皮带秤、配料系统
Crane scale,belt scale,blending system

TECHNICAL PARAMETER| 4Wires:Exc+(红,Red);Exc-(黑,Black);Sig+(绿,Green);Sig-(白,White)

额定载荷 Rated capacities(Emax)	250,300,500,750lb;1,1.5,2,2.5,3,5,7.5,10,20klb	温度补偿范围 Temperature range, compensated	–10℃~+40℃
灵敏度 Sensitivity	3.0±0.003mV/V	工作温度范围 Temperature range, operating	-30~+70℃
综合误差 Total error	±0.03%F.S	安全过载 Maximum safe overload	120%F.S
蠕变(30分钟)Creep error (30min)	±0.03%F.S	极限过载 Ultimate overload	150%F.S
零点平衡 Zero balance	±1%F.S	推荐激励电压 Excitation,recommend	10~12V DC
零点温度影响 TCO	±0.03%F.S/10℃	最大激励电压 Excitation,maximum	15V DC
输出温度影响 TC SPAN	±0.03%F.S/10℃	防封等级 Protection class	IP65(250lb~3klb);IP68(5~20klb)
输入阻抗 Input impedance	400±20Ω	材质 Construction	合金钢Alloy Steel,不锈钢Stainless Steel
输出阻抗 Output impedance	352±3Ω	电缆 Cable	Length:5m
绝缘电阻 Insulation impedance	≥5000MΩ		Diameter: ϕ5mm

DEGYB-A Loadcell

DEGYB-A

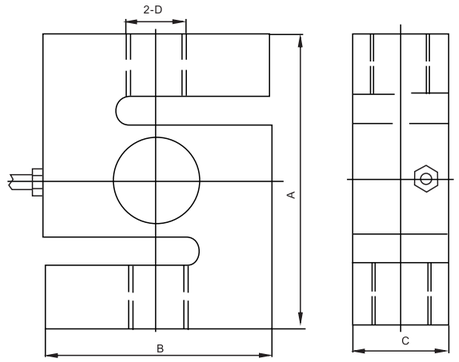

额定载荷(klb) Rated Load	A	B	C	D
10	101.6	76.2	25.4	3/4-16UNF-2B
15	139.7	101.6	31.8	1-14UNS-2B

吊钩秤、皮带秤、配料系统
Crane scale,belt scale, blending system

TECHNICAL PARAMETER| 4Wires:Exc+(红,Red);Exc-(黑,Black);Sig+(绿,Green);Sig-(白,White)

额定载荷 Rated capacities(Emax)	10,15klb	温度补偿范围 Temperature range, compensated	–10℃~+40℃
灵敏度 Sensitivity	3.0±0.003mV/V	工作温度范围 Temperature range, operating	-30~+70℃
综合误差 Total error	±0.03%F.S	安全过载 Maximum safe overload	120%F.S
蠕变(30分钟)Creep error (30min)	±0.03%F.S	极限过载 Ultimate overload	150%F.S
零点平衡 Zero balance	±1%F.S	推荐激励电压 Excitation,recommend	10~12V DC
零点温度影响 TCO	±0.03%F.S/10℃	最大激励电压 Excitation,maximum	15V DC
输出温度影响 TC SPAN	±0.03%F.S/10℃	防封等级 Protection class	IP68
输入阻抗 Input impedance	400±5Ω	材质 Construction	合金钢Alloy Steel
输出阻抗 Output impedance	352±3Ω	电缆 Cable	Length:8m
绝缘电阻 Insulation impedance	≥5000MΩ		Diameter: ϕ5.4mm

DEG/DEM/DEGB Loadcell

DEG/DEM/DEGB

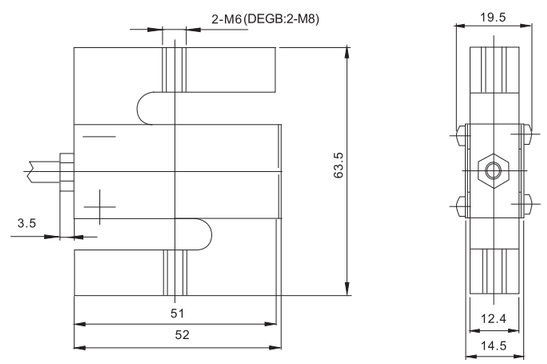

吊钩秤、皮带秤、配料系统
Crane scale,belt scale, blending system

TECHNICAL PARAMETER| 4Wires:Exc+(红,Red);Exc-(黑,Black);Sig+(绿,Green);Sig-(白,White)

额定载荷 Rated capacities(Emax)	50,100kg	温度补偿范围 Temperature range, compensated	–10℃~+40℃
灵敏度 Sensitivity	3.0±0.003mV/V(DEG/DEGB);2.0±0.003mV/V(DEM)	工作温度范围 Temperature range, operating	-30~+70℃
综合误差 Total error	±0.03%F.S	安全过载 Maximum safe overload	120%F.S
蠕变(30分钟)Creep error (30min)	±0.03%F.S	极限过载 Ultimate overload	150%F.S
零点平衡 Zero balance	±1%F.S	推荐激励电压 Excitation,recommend	10~12V DC
零点温度影响 TCO	±0.02%F.S/10℃	最大激励电压 Excitation,maximum	15V DC
输出温度影响 TC SPAN	±0.02%F.S/10℃	防封等级 Protection class	IP65
输入阻抗 Input impedance	400Ω	材质 Construction	合金钢Alloy Steel
输出阻抗 Output impedance	352±3Ω	电缆 Cable	Length:5m
绝缘电阻 Insulation impedance	≥5000MΩ		Diameter: ϕ5mm

DER-A Load cell

DER-A

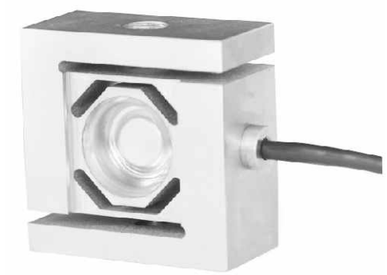

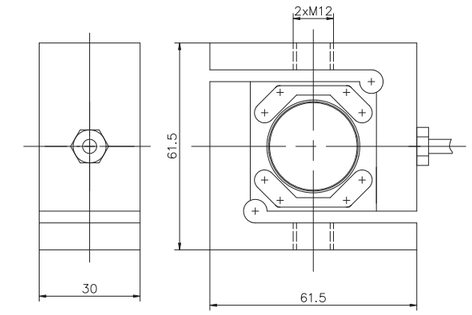

吊钩秤、皮带秤 配料系统
Crane scale,belt scale blending system

TECHNICAL PARAMETER| 4Wires:Exc+(红,Red);Exc-(黑,Black);Sig+(绿,Green);Sig-(白,White)

额定载荷 Rated capacities(Emax)	100,150,200,300,500kg	温度补偿范围 Temperature range, compensated	–10℃~+40℃
灵敏度 Sensitivity	2.0±0.002mV/V	工作温度范围 Temperature range, operating	-30~+70℃
综合误差 Total error	±0.03%F.S	安全过载 Maximum safe overload	150%F.S
蠕变(30分钟)Creep error (30min)	±0.1%F.S	极限过载 Ultimate overload	200%F.S
零点平衡 Zero balance	±1%F.S	推荐激励电压 Excitation,recommend	10~12V DC
零点温度影响 TCO	±0.05%F.S/10℃	最大激励电压 Excitation,maximum	15V DC
输出温度影响 TC SPAN	±0.05%F.S/10℃	防护等级 Protection class	IP67
输入阻抗 Input impedance	400±20Ω	材质 Construction	合金钢Alloy Steel
输出阻抗 Output impedance	352±3Ω	电缆 Cable	Length: 5m
绝缘电阻 Insulation impedance	≥5000MΩ		Diameter: ϕ5mm

DEL/DEL-A/-SS/-ASS Loadcell

DEL/DEL-A/-SS/-ASS

额定载荷(t) Rated Load	A	B	C	D	E
0.1,0.2,0.25 0.3,0.5,0.75	80	70	19	M12	9.5
1,1.5	80	70	25	M12	7
2,3,5	108	95	25	M18x1.5	5.5
7.5,10	178	130	51	M30x2	7
15,20	190	160	60	M39x2	7

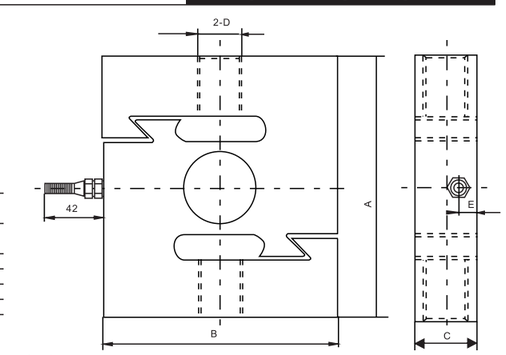

吊钩秤、配料秤、包装秤、机电结合秤及专用测力装置
Crane scale,blending scale,packing scale,electromechanical scale,special testing device

TECHNICAL PARAMETER| 4Wires:Exc+(红,Red);Exc-(黑,Black);Sig+(绿,Green);Sig-(白,White)

额定载荷 Rated capacities(Emax)	0.1,0.2,0.25,0.3,0.5,0.75,1	温度补偿范围 Temperature range, compensated	–10℃~+40℃
	1.5,2,3,5,7.5,10,15,20t	工作温度范围 Temperature range, operating	-30~+70℃
灵敏度 Sensitivity	2.0±0.002mV/V	安全过载 Maximum safe overload	120%F.S
综合误差 Total error	±0.05%F.S	极限过载 Ultimate overload	250%F.S
蠕变(30分钟)Creep error (30min)	±0.03%F.S	推荐激励电压 Excitation,recommend	10~12V DC
零点平衡 Zero balance	±1%F.S	最大激励电压 Excitation,maximum	15V DC
零点温度影响 TCO	±0.03%F.S/10℃	防封等级 Protection class	IP65(0.1~5t)
输出温度影响 TC SPAN	±0.03%F.S/10℃		IP68(7.5~20t)
输入阻抗 Input impedance	400±20Ω	材质 Construction	合金钢Alloy Steel 不锈钢Stainless Steel
输出阻抗 Output impedance	352±3Ω	电缆 Cable	Length:6m
绝缘电阻 Insulation impedance	≥5000MΩ		Diameter: ϕ5mm

DELY Load cell

DELY

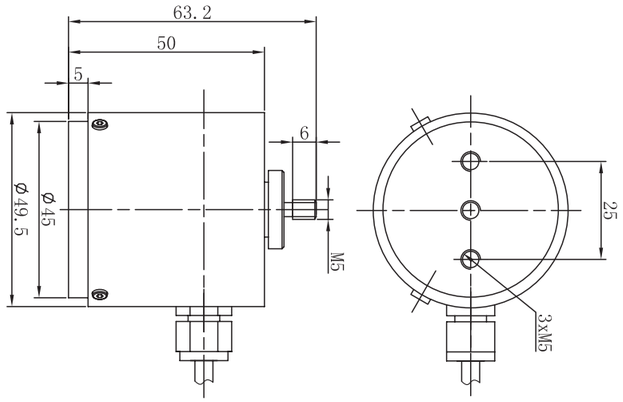

试验机
Testing machine

TECHNICAL PARAMETER| 4Wires:Exc+(红,Red);Exc-(黑,Black);Sig+(绿,Green);Sig-(白,White)

额定载荷 Rated capacities(Emax)	5,10，15，20Kg	温度补偿范围 Temperature range, compensated	–10~+40℃
灵敏度 Sensitivity	2.0±0.1mV/V	工作温度范围 Temperature range, operating	-30~+70℃
综合误差 Total error	±0.1%F.S	安全过载 Maximum safe overload	150%F.S
蠕变(30分钟)Creep error (30min)	±0.1%F.S	极限过载 Ultimate overload	200%F.S
零点平衡 Zero balance	±1%F.S	推荐激励电压 Excitation,recommend	10~12V DC
零点温度影响 TCO	±0.05%F.S/10℃	最大激励电压 Excitation,maximum	15V DC
输出温度影响 TC SPAN	±0.05%F.S/10℃	防护等级 Protection class	IP40
输入阻抗 Input impedance	450±50Ω	材质 Construction	铝合金 Aluminium
输出阻抗 Output impedance	352±3Ω	电缆 Cable	Length:1.2m
绝缘电阻 Insulation impedance	≥5000MΩ		Diameter: ϕ5mm

PSTB Loadcell

PSTB

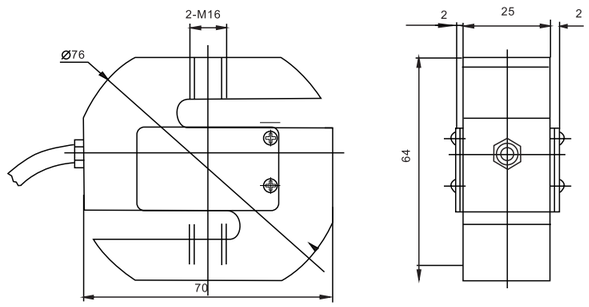

吊钩秤、配料秤、包装秤、机电结合秤及专用测力装置
Crane scale,blending scale,packing scale,electromechanical scale,special testing device

TECHNICAL PARAMETER| 4Wires:Exc+(红,Red);Exc-(黑,Black);Sig+(绿,Green);Sig-(白,White)

额定载荷 Rated capacities(Emax)	1t	温度补偿范围 Temperature range, compensated	–10℃~+40℃
灵敏度 Sensitivity	2.0±0.002mV/V	工作温度范围 Temperature range, operating	-30~+70℃
综合误差 Total error	±0.03%F.S	安全过载 Maximum safe overload	120%F.S
蠕变(30分钟)Creep error (30min)	±0.03%F.S	极限过载 Ultimate overload	200%F.S
零点平衡 Zero balance	±1%F.S	推荐激励电压 Excitation,recommend	10~12V DC
零点温度影响 TCO	±0.02%F.S/10℃	最大激励电压 Excitation,maximum	15V DC
输出温度影响 TC SPAN	±0.02%F.S/10℃	防封等级 Protection class	IP65
输入阻抗 Input impedance	400Ω	材质 Construction	合金钢Alloy Steel
输出阻抗 Output impedance	352±3Ω	电缆 Cable	Length:2.6m
绝缘电阻 Insulation impedance	≥5000MΩ		Diameter: ϕ5mm

XSCB/XSGB Loadcell

XSCB/XSGB

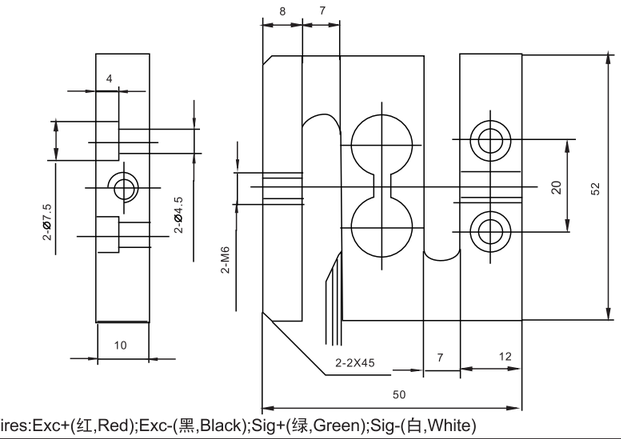

各种拉压场合、内置式测力专用设备
Tebsion testing for pull/push &special device

TECHNICAL PARAMETER| 4Wires:Exc+(红,Red);Exc-(黑,Black);Sig+(绿,Green);Sig-(白,White)

额定载荷 Rated capacities(Emax)	1,2,3,5,10,20,50,100kg（XSG	温度补偿范围 Temperature range, compensated	–10℃~+40℃
灵敏度 Sensitivity	0.5mV/V(1kg)	工作温度范围 Temperature range, operating	-30~+70℃
	1.0mV/V(2~100kg)	安全过载 Maximum safe overload	120%F.S
综合误差 Total error	±0.2%F.S	极限过载 Ultimate overload	150%F.S
蠕变(30分钟)Creep error (30min)	±0.2%F.S	推荐激励电压 Excitation,recommend	10~12V DC
零点平衡 Zero balance	±1%F.S	最大激励电压 Excitation,maximum	15V DC
零点温度影响 TCO	±0.2%F.S/10℃	防封等级 Protection class	IP65
输出温度影响 TC SPAN	±0.2%F.S/10℃	材质 Construction	铝合金Aluminium(XSCB);合金钢Alloy Steel(XSGB)
输入阻抗 Input impedance	350±5Ω	电缆 Cable	
输出阻抗 Output impedance	350±5Ω		Length:25cm(排线)
绝缘电阻 Insulation impedance	≥5000MΩ		

PST/PST-A/-SS/-ASS Loadcell

PST/PST-A/-SS/-ASS

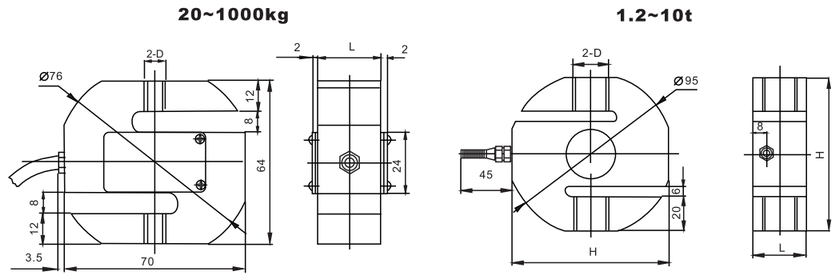

吊钩秤、配料秤、包装秤、机电结合秤及专用测力装置
Crane scale,blending scale,packing scale,electromechanical scale,special testing device

额定载荷(kg) Rated Load	D	L
20~150	M8	12
200~500	M12	20
700~1000	M12	25

额定载荷(t) Rated Load	D(mm)	L(mm)	H
1.2~5	M20	32	90
7.5	M24	40	90
10	M30x2	50	110

TECHNICAL PARAMETER| 4Wires:Exc+(红,Red);Exc-(黑,Black);Sig+(绿,Green);Sig-(白,White)

额定载荷 Rated capacities(Emax)	20,30,50,75,100,150,200,250,300,500,700,1000kg;	温度补偿范围 Temperature range, compensated	–10℃~+40℃
	1.2,1.5,2,2.5,3,5,7.5,10t	工作温度范围 Temperature range, operating	-30~+70℃
灵敏度 Sensitivity	2.0±0.003mV/V（20kg~7.5t）；1.8±0.002mV/V（10t）	安全过载 Maximum safe overload	120%F.S
精度等级 Accuracy class	C2~C3	极限过载 Ultimate overload	200%F.S
		推荐激励电压 Excitation,recommend	10~12V DC
零点平衡 Zero balance	±1%F.S	最大激励电压 Excitation,maximum	15V DC
零点温度影响 TCO	±0.02%F.S/10℃	防封等级 Protection class	IP65 (20~100kg);
输出温度影响 TC SPAN	±0.02%F.S/10℃	材质 Construction	IP68 (1.2~10t)
输入阻抗 Input impedance	400±20Ω(200~300kg,1.2~10t）	电缆 Cable	合金钢Alloy Steel,不锈钢Stainless Steel
输出阻抗 Output impedance	352±3Ω		Length:2.6m(20~1000kg),3m(1.2~10t)
绝缘电阻 Insulation impedance	≥5000MΩ		Diameter: ϕ5mm(20~1000kg,10t), ϕ6mm(1.2~7.5t)

PST/PST-A/-SS/-ASS Components

PST/PST-A/-SS/-ASS

总装B附件 (Diagram B)

PST20~1000kg

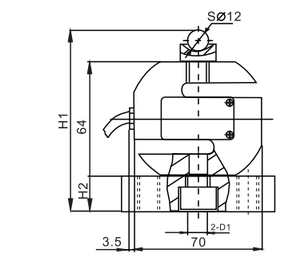

PST 1.2~7.5t

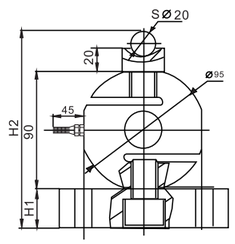

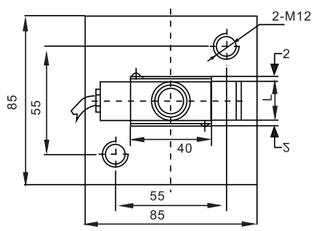

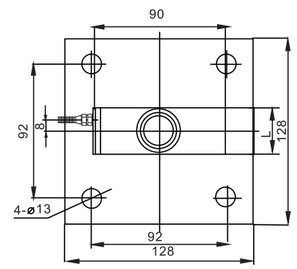

额定载荷(kg) Rated Load	H1	H2	D1	L
20~150	97	15	M8	12
200~500	103	19	M12	20
700~1000	103	19	M12	25

额定载荷(t) Rated Load	H1	H2	L
1.2~5	29	151	32
7.5	34	156	40

总装C附件 (Diagram C)

PST20~1000kg

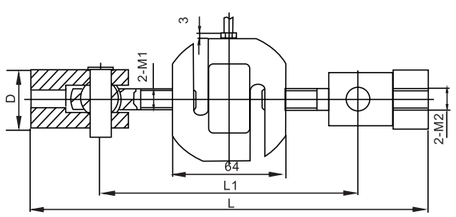

PST 1.2~7.5t

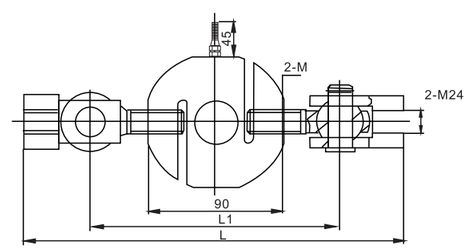

额定载荷(kg) Rated Load	Lmax	L1max	M1	M2	D
20~150	184	124	M8	M8	ϕ24
200~500	228	148	M12	M12	ϕ34
700~1000	228	148	M12	M12	ϕ34

额定载荷(t) Rated Load	Lmax	L1max	M
1.2~5	326	206	M20
7.5	370	230	M24

总装E附件 (Diagram E)

PST20~300kg

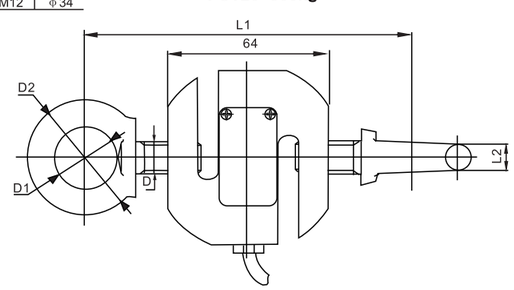

额定载荷(kg) Rated Load	D	D1	D2	L1max	L2
20~150	M8	ϕ20	ϕ36	108	9
200~300	M12	ϕ28	ϕ52	136	13

ZY-A Loadcell

ZY-A

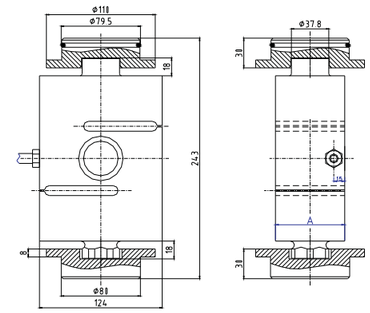

额定载荷(t) Rated Load	A
15,20	70
30	80

汽车衡、地上衡
Truck scale,floor scale

TECHNICAL PARAMETER | 4Wires:Exc+(红,Red);Exc-(黑,Black);Sig+(绿,Green);Sig-(白,White)

额定载荷 Rated capacities(Emax)	15,20,30t	温度补偿范围 Temperature range, compensated	–10℃~+40℃
灵敏度 Sensitivity	2.0±0.003mV/V	工作温度范围 Temperature range, operating	-30~+70℃
综合误差 Total error	±0.03%F.S	安全过载 Maximum safe overload	150%F.S
蠕变(30分钟)Creep error (30min)	±0.03%F.S	极限过载 Ultimate overload	250%F.S
零点平衡 Zero balance	±1%F.S	推荐激励电压 Excitation,recommend	10~12V DC
零点温度影响 TCO	±0.02%F.S/10℃	最大激励电压 Excitation,maximum	15V DC
输出温度影响 TC SPAN	±0.02%F.S/10℃	防封等级 Protection class	IP68
输入阻抗 Input impedance	380±20Ω	材质 Construction	合金钢Alloy Steel
输出阻抗 Output impedance	352±3Ω	电缆 Cable	Length:12m
绝缘电阻 Insulation impedance	≥5000MΩ		Diameter: ϕ6mm

DSS Loadcell

DSS

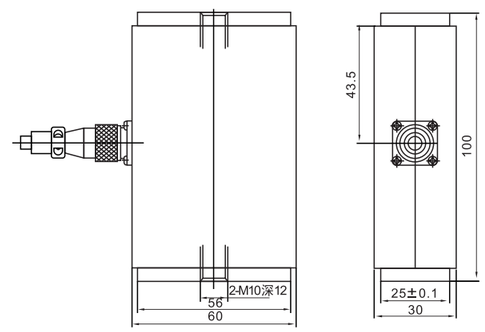

多量程实验机
Varied range testing Machines

TECHNICAL PARAMETER | 6Wires: Exc+(红,Red);Exc-(黑,Black);Sig1(信号)+(绿,Green);Sig1(信号)-(白,White);Sig2(信号)+(蓝,Blue;Sig2(信号)-(黄,Yellow)

额定载荷 Rated capacities(Emax)	100/1000kg(双量程dual capacity)	温度补偿范围 Temperature range, compensated	–10℃~+40℃
灵敏度 Sensitivity	2.0±0.005mV/V	工作温度范围 Temperature range, operating	-30~+70℃
综合误差 Total error	±0.1%F.S	安全过载 Maximum safe overload	120%F.S
蠕变(30分钟)Creep error (30min)	±0.03%F.S	极限过载 Ultimate overload	150%F.S
零点平衡 Zero balance	±1%F.S	推荐激励电压 Excitation,recommend	10~12V DC
零点温度影响 TCO	±0.02%F.S/10℃	最大激励电压 Excitation,maximum	15V DC
输出温度影响 TC SPAN	±0.02%F.S/10℃	防封等级 Protection class	IP65
输入阻抗 Input impedance	200±5Ω	材质 Construction	合金钢Alloy Steel
输出阻抗 Output impedance	352±3Ω	电缆 Cable	Length:6m
绝缘电阻 Insulation impedance	≥5000MΩ		Diameter: ϕ6mm

DEE/DEF-A/-SS/-ASS Loadcell

DEE/DEF-A/-SS/-ASS

OIML

100~1000kg

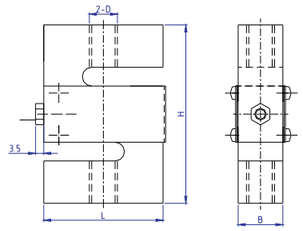

1.2~5t

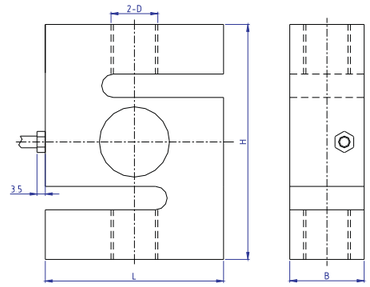

额定载荷(kg) Rated Load	D	L	H	B
100~750	M12	51	76.2	19.1
1000	M12	51	76.2	25.4
1200~5000	M20x1.5	76.2	100.4	31.8

吊钩秤、皮带秤、配料系统
Crane scale,belt scale, blending system

TECHNICAL PARAMETER| 4Wires:Exc+(红,Red);Exc-(黑,Black);Sig+(绿,Green);Sig-(白,White)

额定载荷 Rated capacities(Emax)	100,150,200,250,300,500,750kg;1,1.2,1.5,2,3,5t	温度补偿范围 Temperature range, compensated	–10℃~+40℃
灵敏度 Sensitivity	2.0±0.003mV/V(DEE);3.0±0.003mV/V(DEF)	工作温度范围 Temperature range, operating	-30~+70℃
精度等级 Accuracy class	C2~C5	安全过载 Maximum safe overload	120%F.S
		极限过载 Ultimate overload	150%F.S
零点平衡 Zero balance	±1%F.S	推荐激励电压 Excitation,recommend	10~12V DC
零点温度影响 TCO	±0.02%F.S/10℃	最大激励电压 Excitation,maximum	15V DC
输出温度影响 TC SPAN	±0.02%F.S/10℃	防封等级 Protection class	IP65(100~1000kg);IP68(1200~5000kg)
输入阻抗 Input impedance	400±20Ω	材质 Construction	合金钢Alloy Steel, 不锈钢Stainless Steel
输出阻抗 Output impedance	352±3Ω	电缆 Cable	Length:5m
绝缘电阻 Insulation impedance	≥5000MΩ		Diameter: φ5mm

ZSFN-A Loadcell

ZSFN-A

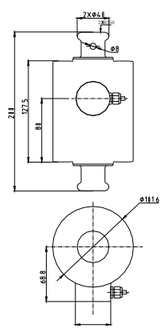

汽车衡
Truck scale

TECHNICAL PARAMETER| 4Wires:Exc+(红,Red);Exc-(黑,Black);Sig+(绿,Green);Sig-(白,White)

额定载荷 Rated capacities(Emax)	30,45t	温度补偿范围 Temperature range, compensated	–10℃~+40℃
灵敏度 Sensitivity	2.0±0.003mV/V	工作温度范围 Temperature range, operating	-30~+70℃
综合误差 Total error	±0.03%F.S	安全过载 Maximum safe overload	150%F.S
蠕变(30分钟)Creep error (30min)	±0.02%F.S	极限过载 Ultimate overload	200%F.S
零点平衡 Zero balance	±1%F.S	推荐激励电压 Excitation,recommend	10~12DC
零点温度影响 TCO	±0.02%F.S/10℃	最大激励电压 Excitation,maximum	15V DC
输出温度影响 TC SPAN	±0.02%F.S/10℃	防封等级 Protection class	IP68
输入阻抗 Input impedance	750 ±10Ω	材质 Construction	合金钢Alloy Steel
输出阻抗 Output impedance	702±3Ω	电缆 Cable	Length: 10m
绝缘电阻 Insulation impedance	≥5000MΩ		Diameter: φ6mm

ZSNG-A Loadcell

ZSNG-A

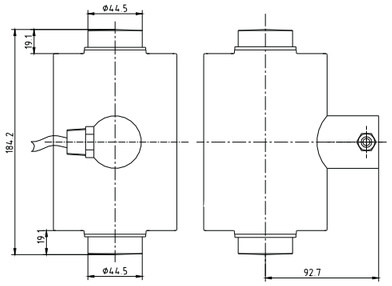

汽车衡
Truck scale

TECHNICAL PARAMETER| 4Wires:Exc+(红,Red);Exc-(黑,Black);Sig+(绿,Green);Sig-(白,White)

额定载荷 Rated capacities(Emax)	50,100,120klb	温度补偿范围 Temperature range, compensated	–10℃~+40℃
灵敏度 Sensitivity	2.0±0.03mV/V	工作温度范围 Temperature range, operating	-30~+70℃
综合误差 Total error	±0.03%F.S	安全过载 Maximum safe overload	150%F.S
蠕变(30分钟)Creep error (30min)	±0.02%F.S	极限过载 Ultimate overload	200%F.S
零点平衡 Zero balance	±1%F.S	推荐激励电压 Excitation,recommend	10~12DC
零点温度影响 TCO	±0.02%F.S/10℃	最大激励电压 Excitation,maximum	15V DC
输出温度影响 TC SPAN	±0.02%F.S/10℃	防封等级 Protection class	IP68
输入阻抗 Input impedance	1150±10Ω	材质 Construction	合金钢Alloy Steel
输出阻抗 Output impedance	1050±10Ω	电缆 Cable	Length: 9m
绝缘电阻 Insulation impedance	≥5000MΩ		Diameter: φ6mm

ZZS-A Load cell

ZZS-A

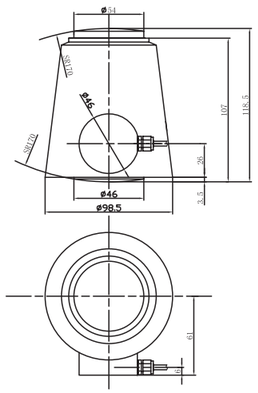

食品、医药、化工行业称重及控制等场合
Food, medicine, chemical industry weighing and control etc.

TECHNICAL PARAMETER| 4Wires:Exc+(红,Red);Exc-(黑,Black);Sig+(绿,Green);Sig-(白,White)

额定载荷 Rated capacities(Emax)	25,50t	温度补偿范围 Temperature range, compensated	–10~+40℃
灵敏度 Sensitivity	2.0±0.003mV/V	工作温度范围 Temperature range, operating	-30~+70℃
综合误差 Total error	±0.03%F.S	安全过载 Maximum safe overload	120%F.S
蠕变(30分钟)Creep error (30min)	±0.03%F.S	极限过载 Ultimate overload	200%F.S
零点平衡 Zero balance	±1%F.S	推荐激励电压 Excitation,recommend	10~12V DC
零点温度影响 TCO	±0.03%F.S/10℃	最大激励电压 Excitation,maximum	15V DC
输出温度影响 TC SPAN	±0.03%F.S/10℃	防护等级 Protection class	IP68
输入阻抗 Input impedance	1080±20Ω	材质 Construction	合金钢Alloy Steel
输出阻抗 Output impedance	1005±5Ω	电缆 Cable	
绝缘电阻 Insulation impedance	≥5000MΩ	Length: 12m	Diameter: φ5mm

SZSC Loadcell

SZSC

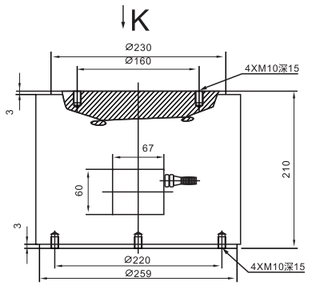

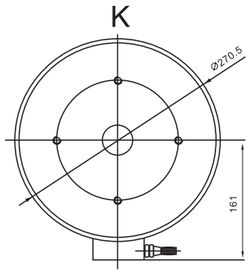

大吨位测力机用
Big capacity measure equipment

TECHNICAL PARAMETER| 4Wires:Exc+(红,Red);Exc-(黑,Black);Sig+(绿,Green);Sig-(白,White)

额定载荷 Rated capacities(Emax)	500t	温度补偿范围 Temperature range, compensated	–10℃~+40℃
灵敏度 Sensitivity	2.0±0.005mV/V	工作温度范围 Temperature range, operating	-30~+70℃
综合误差 Total error	±0.2%F.S	安全过载 Maximum safe overload	150%F.S
蠕变(30分钟)Creep error (30min)	±0.05%F.S	极限过载 Ultimate overload	200%F.S
零点平衡 Zero balance	±1%F.S	推荐激励电压 Excitation,recommend	10~12V DC
零点温度影响 TCO	±0.05%F.S/10℃	最大激励电压 Excitation,maximum	15V DC
输出温度影响 TC SPAN	±0.05%F.S/10℃	防封等级 Protection class	IP67
输入阻抗 Input impedance	350±10Ω	材质 Construction	合金钢Alloy Steel
输出阻抗 Output impedance	352±3Ω	电缆 Cable	Length:12m
绝缘电阻 Insulation impedance	≥5000MΩ		Diameter: ϕ6mm

ZSF–A/–ASS/ZSFY–A/–ASS Loadcell

ZSF–A/–ASS/ZSFY–A/–ASS

RoHS
OIML

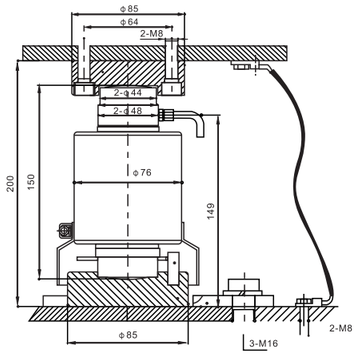

汽车衡、轨道衡、轴重秤、地上衡
Truck scale,railway scale,axle-load scale,floor scale

TECHNICAL PARAMETER| 4Wires:Exc+(红,Red);Exc-(黑,Black);Sig+(绿,Green);Sig-(白,White)

额定载荷 Rated capacities(Emax)	10,15,20,25,30,40,50t	温度补偿范围 Temperature range, compensated	–10℃~+40℃
灵敏度 Sensitivity	2.0±0.002mV/V	工作温度范围 Temperature range, operating	-30~+70℃
精度等级 Accuracy class	C2~C5	安全过载 Maximum safe overload	150%F.S
		极限过载 Ultimate overload	250%F.S
零点平衡 Zero balance	±1%F.S	推荐激励电压 Excitation,recommend	10~12V DC
零点温度影响 TCO	±0.02%F.S/10℃	最大激励电压 Excitation,maximum	15V DC
输出温度影响 TC SPAN	±0.02%F.S/10℃	防封等级 Protection class	IP68
输入阻抗 Input impedance	400±20Ω(ZSF),700±20Ω(ZSFY)	材质 Construction	合金钢Alloy Steel 不锈钢Stainless Steel
输出阻抗 Output impedance	352±3Ω；352±5Ω（L≥15m)(ZSF),706±7Ω(ZSFY)	电缆 Cable	Length:8m(10t),10m(15t),12m(20~25t),14m(30t),16m(40~50t)
绝缘电阻 Insulation impedance	≥5000MΩ		Diameter: ϕ5mm

ZSF–A/ZSFY–A Weighing module

ZSF–A/ZSFY–A称重模块

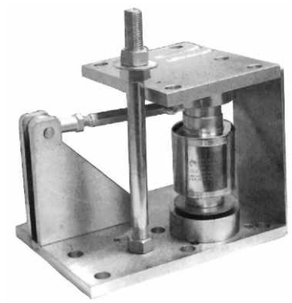

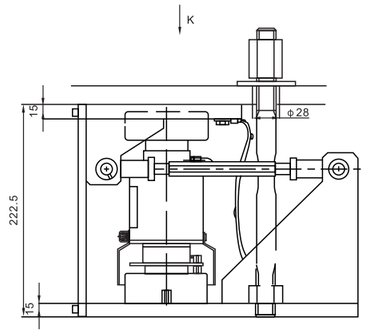

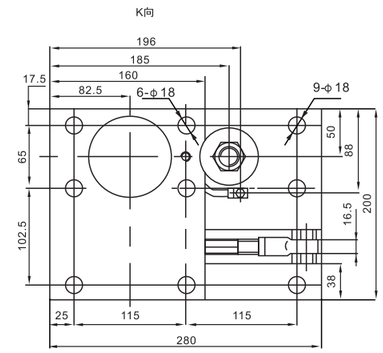

ZSFB–D Loadcell

ZSFB–D

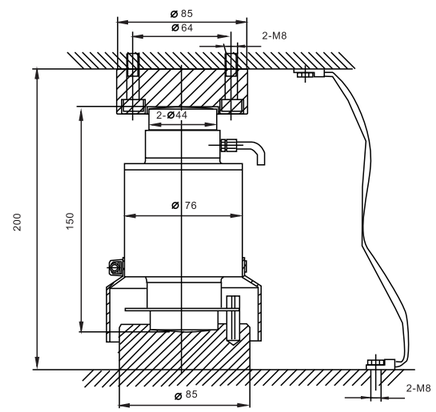

汽车衡、轨道衡、轴重秤、地上秤
Truck scale,railway scale,axle-load scale,floor scale

TECHNICAL PARAMETER| 4Wires:Exc+(红,Red);Exc-(黑,Black);Sig+(绿,Green);Sig-(白,White)

数字模块分辨数 A/D Module Resolutin	60000码	工作温度范围 Temperature range, operating	-30~+70℃
额定载荷 Rated capacities(Emax)	20,25,30,40,50t	安全过载 Maximum safe overload	±0.02%F.S/10℃
额定输出 Rated output	20000,25000,30000,40000,50000内码	极限过载 Ultimate overload	150%F.S
数据刷新速率 Digital Refurbishing Frepuency	50 Hz	推荐激励电压 Excitation,recommend	IP68
通讯波特率 Communication BPS	9600BPS	最大激励电压 Excitation,maximum	9~12V DC
精度等级 Accuracy class	C3	防封等级 Protection class	20V DC
		材质 Construction	1200m
温度系数 Tempperature Effect	±0.02%F.S	电缆 Cable	Length:12m(20t),15m(25t),16m(30~50t)
温度补偿范围 Temperature range, compensated	–10℃~+40℃		Diameter: ϕ5mm

ZSGB–A/–ASS/ZSGBY–A/–ASS Loadcell

ZSGB–A/–ASS/ZSGBY–A/–ASS

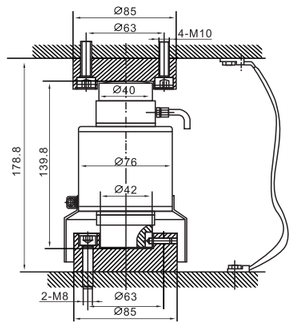

汽车衡、轨道衡、轴重秤、地上秤
Truck scale,railway scale, axle-load scale,floor scale

TECHNICAL PARAMETER| 4Wires:Exc+(红,Red);Exc-(黑,Black);Sig+(绿,Green);Sig-(白,White)

额定载荷 Rated capacities(Emax)	5,10,15,20,25,30tt	温度补偿范围 Temperature range, compensated	–10℃~+40℃
灵敏度 Sensitivity	2.0±0.002mV/V	工作温度范围 Temperature range, operating	-30~+70℃
精度等级 Accuracy class	C2~C3	安全过载 Maximum safe overload	150%F.S
蠕变(30分钟)Creep error (30min)		极限过载 Ultimate overload	250%F.S
零点平衡 Zero balance	±1%F.S	推荐激励电压 Excitation,recommend	10~12V DC
零点温度影响 TCO	±0.02%F.S/10℃	最大激励电压 Excitation,maximum	15V DC
输出温度影响 TC SPAN	±0.02%F.S/10℃	防封等级 Protection class	IP68
输入阻抗 Input impedance	400±20Ω(ZSGB),700±20Ω(ZSGBY)	材质 Construction	合金钢Alloy Steel 不锈钢Stainless Steel
输出阻抗 Output impedance	352±3Ω(ZSGB),706±7Ω（ZSGBY）	电缆 Cable	Length=L:8m(10t),10m(15t),12m(20,25t),14m(30t)
绝缘电阻 Insulation impedance	≥5000MΩ		Diameter: ϕ5mm

ZSJB–A/–ASS Loadcell

ZSJB–A/–ASS

压式测力试验设备
Compression testing equipment

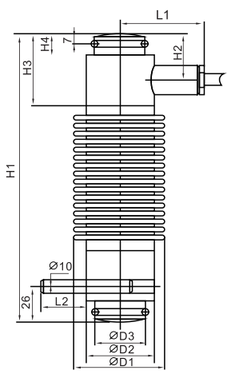

额定载荷(t) Rated Load	L1	L2	H1	H2	H3	H4	D1	D2	D3	Smax
25,30	62	33	192	34	51	15	72	50	37	10.5
40	69	26	225	36	57	16	85	64	37	11
50,60									54.4	12.5
90	69	26	225	36	57	16	85	64	54.4	9

注：Smax为允许的最大侧向位移，推荐侧向位移对于25t取3mm，30-90t取3-5mm。

TECHNICAL PARAMETER| 4Wires:Exc+(红,Red);Exc-(黑,Black);Sig+(绿,Green);Sig-(白,White)

额定载荷 Rated capacities(Emax)	25,30,40,50,60,90t	温度补偿范围 Temperature range, compensated	–10℃~+40℃
灵敏度 Sensitivity	2.0±0.005mV/V	工作温度范围 Temperature range, operating	-30~+70℃
综合误差 Total error	±0.03%F.S(合金钢alloy steel);±0.05%F.S（50,90t不锈钢stainless steel）	安全过载 Maximum safe overload	150%F.S
蠕变(30分钟)Creep error (30min)	±0.03%F.S,±0.05%F.S	极限过载 Ultimate overload	250%F.S
零点平衡 Zero balance	±1%F.S	推荐激励电压 Excitation,recommend	10~12V DC
零点温度影响 TCO	±0.02%F.S/10℃	最大激励电压 Excitation,maximum	15V DC
输出温度影响 TC SPAN	±0.02%F.S/10℃	防封等级 Protection class	IP68(10~40t)
输入阻抗 Input impedance	400±20Ω	材质 Construction	合金钢Alloy Steel,不锈钢Stainless Steel
输出阻抗 Output impedance	352±3Ω,352±5Ω(L≥15m)	电缆 Cable	Length=L:10m(25,30t),16m(40,50t),18m(60,90t)
绝缘电阻 Insulation impedance	≥5000MΩ		Diameter: ϕ8mm

ZSM–A Loadcell

ZSM–A

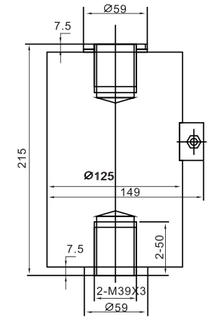

大型起重机械、实验机
Large-size crane equipment,Lab testing equipment

TECHNICAL PARAMETER| 6Wires:Exc+(红,Red);Exc-(黑,Black);Sig+(绿,Green);Sig-(白,White);Sen+(蓝,Blue);Sen-(黄,Yellow)

额定载荷 Rated capacities(Emax)	5,10,15,20t	温度补偿范围 Temperature range, compensated	–10℃~+40℃
灵敏度 Sensitivity	2.0±0.005mV/V	工作温度范围 Temperature range, operating	-30~+70℃
综合误差 Total error	±0.05%F.S	安全过载 Maximum safe overload	120%F.S
蠕变(30分钟)Creep error (30min)	±0.03%F.S	极限过载 Ultimate overload	150%F.S
零点平衡 Zero balance	±1%F.S	推荐激励电压 Excitation,recommend	10~12V DC
零点温度影响 TCO	±0.03%F.S/10℃	最大激励电压 Excitation,maximum	15V DC
输出温度影响 TC SPAN	±0.03%F.S/10℃	防封等级 Protection class	IP68
输入阻抗 Input impedance	400±20Ω	材质 Construction	合金钢Alloy Steel
输出阻抗 Output impedance	352±3Ω	电缆 Cable	Length:3m
绝缘电阻 Insulation impedance	≥5000MΩ		Diameter: ϕ8mm

ZSKB–A/–ASS Loadcell

ZSKB–A/–ASS

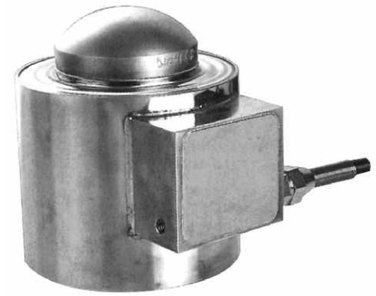

总装（A）附件 *(Diagram A)*

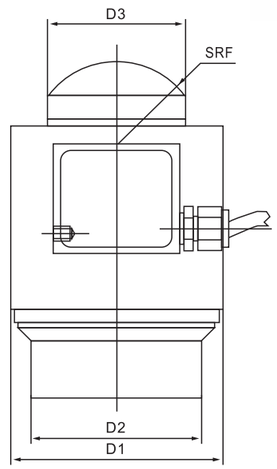

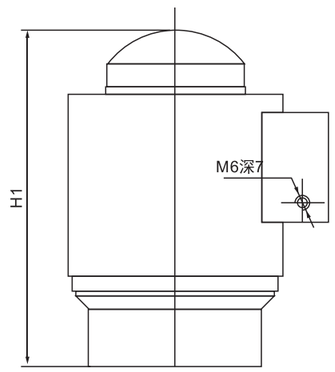

总装（B）附件 (Diagram B)

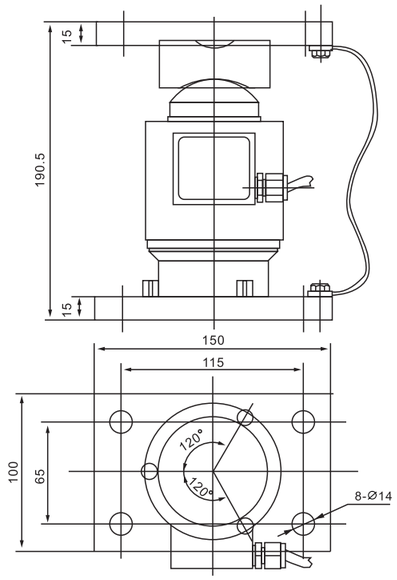

额定载荷(t) Rated Load	2~5	10~50
D1	ϕ87	ϕ87
D2	ϕ70	ϕ70
D3	ϕ24	ϕ54
H1	138.5	138.5
F	15	35

ZSKB-A/-ASS Loadcell

ZSKB-A/-ASS

汽车衡、轨道衡、轴重秤、罐装秤
Truck scale,railway scale, axle-load scale,canned scale

TECHNICAL PARAMETER

6Wires:Exc+(红,Red);Exc-(黑,Black);Sig+(绿,Green);Sig-(白,White);Sen+(蓝,Blue);Sen-(黄,Yellow)

额定载荷 Rated capacities(Emax)	2,3,5,15,20,25,30,40,50t	温度补偿范围 Temperature range, compensated	–10℃~+40℃
灵敏度 Sensitivity	1.0±0.002mV/V	工作温度范围 Temperature range, operating	-30~+70℃
综合误差 Total error	±0.03%F.S;±0.05%F.S（40~50t,不锈钢stainless steel）	安全过载 Maximum safe overload	150%F.S
蠕变(30分钟)Creep error (30min)	±0.02%F.S	极限过载 Ultimate overload	250%F.S
零点平衡 Zero balance	±1%F.S	推荐激励电压 Excitation,recommend	10~12V DC
零点温度影响 TCO	±0.03%F.S/10℃	最大激励电压 Excitation,maximum	15V DC
输出温度影响 TC SPAN	±0.03%F.S/10℃	防封等级 Protection class	IP68
输入阻抗 Input impedance	650±10Ω	材质 Construction	合金钢Alloy Steel 不锈钢Stainless Steel
输出阻抗 Output impedance	610±3Ω	电缆 Cable	Length:14m
绝缘电阻 Insulation impedance	≥5000MΩ		Diameter: φ6mm

模块附件
Module accessories

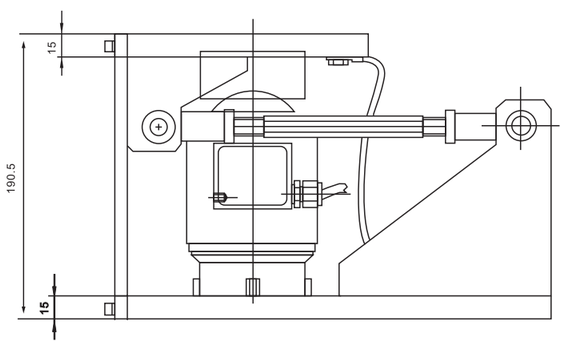

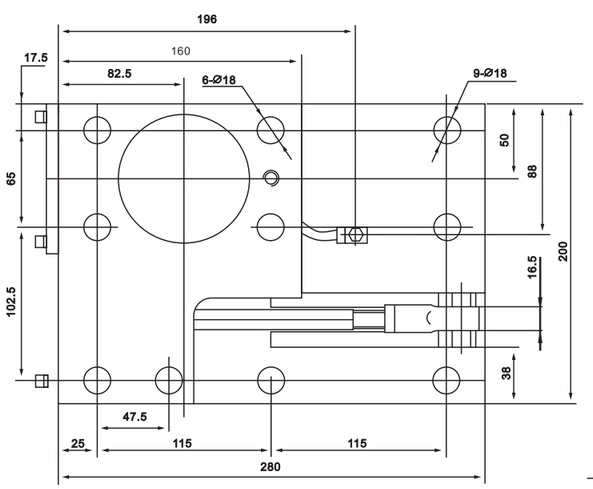

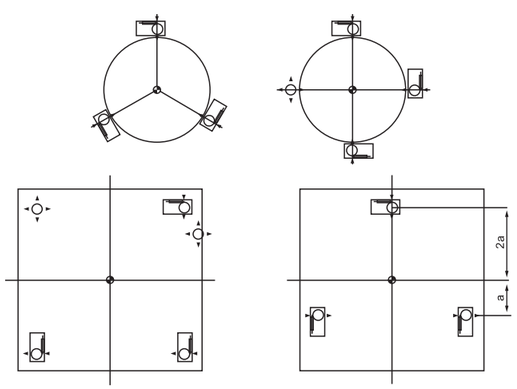

安装方式
Installation

ZSE-A Loadcell

ZSE-A

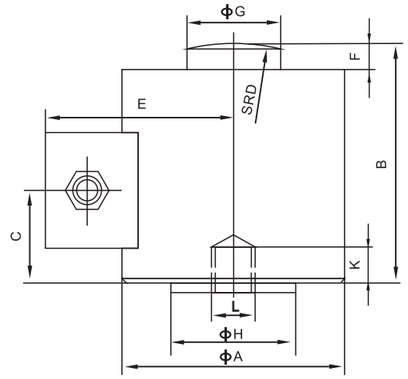

实验机设备及各种专用衡器
Testing equipment and special scale

额定载荷(t) Rated Load	A	B	C	D	E	F	G	H	K	L
20	76	82.6	48	150	56	9	31.8	48	10	M12
25	100	117	65	150	76	12	38	38	14	M20
30	100	117	65	150	76	12	38	38	10	M12
40	100	117	65	150	76	12	38	38	14	M20
50,60	107	127	66	200	81	12.7	58	64	14	M20
70	125	142	91	250	86.5	13	58	64	14	M20
100	165	184	104	300	111.8	20	70	70	20	M20
150	165	184	104	300	111.8	20	70	78	20	M20
200	223	250	152	500	137.5	20	100	112	36	M24
300,400	223	250	152	500	137.5	20	108	112	36	M24

TECHNICAL PARAMETER

6Wires:Exc+(红,Red);Exc-(黑,Black);Sig+(绿,Green);Sig-(白,White);Sen+(蓝,Blue);Sen-(黄,Yellow)

额定载荷 Rated capacities(Emax)	20,25,30,40,50,60,70,100,150,200,300 ,400t	温度补偿范围 Temperature range, compensated	–10℃~+40℃
灵敏度 Sensitivity	2.0±0.002mV/V	工作温度范围 Temperature range, operating	-30~+70℃
综合误差 Total error	±0.03%F.S(20~60t);±0.05%F.S（70~100t）±0.1%F.S(150~400t)	安全过载 Maximum safe overload	150%F.S
蠕变(30分钟)Creep error (30min)	±0.03%F.S	极限过载 Ultimate overload	200%F.S
零点平衡 Zero balance	±1%F.S	推荐激励电压 Excitation,recommend	10~12V DC
零点温度影响 TCO	±0.02%F.S/10℃	最大激励电压 Excitation,maximum	15V DC
输出温度影响 TC SPAN	±0.02%F.S/10℃	防封等级 Protection class	IP68
输入阻抗 Input impedance	400±20Ω	材质 Construction	合金钢Alloy Steel
输出阻抗 Output impedance	352±3Ω;352±5Ω(L≥15m)	电缆 Cable	LengthL:12m(20t),14m(25~40t),16m(50~150t),20m(200~400t)
绝缘电阻 Insulation impedance	≥5000MΩ		Diameter: φ8mm ; 6mm（20t）

ZSL-A Loadcell

ZSL-A

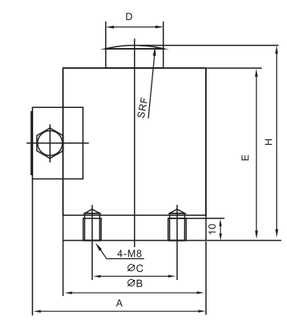

各种专用衡器、测力设备
Speical scale,tension testing equipment

额定载荷(t) Rated Load	H	A	B	C	D	E	F
1,2,3,5	88	78	φ64	φ38	φ26	78	80
10	106	88	φ76	φ46	φ34	95	120
15,20	130	107	φ88	φ56	φ34	118	120

TECHNICAL PARAMETER

4Wires:Exc+(红,Red);Exc-(黑,Black);Sig+(绿,Green);Sig-(白,White)

额定载荷 Rated capacities(Emax)	1,2,3,5,10,15,20t	温度补偿范围 Temperature range, compensated	–10℃~+40℃
灵敏度 Sensitivity	2.0±0.005mV/V	工作温度范围 Temperature range, operating	-30~+70℃
综合误差 Total error	±0.1%F.S	安全过载 Maximum safe overload	150%F.S
蠕变(30分钟)Creep error (30min)	±0.05%F.S	极限过载 Ultimate overload	200%F.S
零点平衡 Zero balance	±1%F.S	推荐激励电压 Excitation,recommend	10~12V DC
零点温度影响 TCO	±0.02%F.S/10℃	最大激励电压 Excitation,maximum	15V DC
输出温度影响 TC SPAN	±0.02%F.S/10℃	防封等级 Protection class	IP68
输入阻抗 Input impedance	400±20Ω	材质 Construction	合金钢Alloy Steel
输出阻抗 Output impedance	352±3Ω	电缆 Cable	Length:3m
绝缘电阻 Insulation impedance	≥5000MΩ		Diameter: φ5mm

ZSP-A Loadcell

ZSP-A

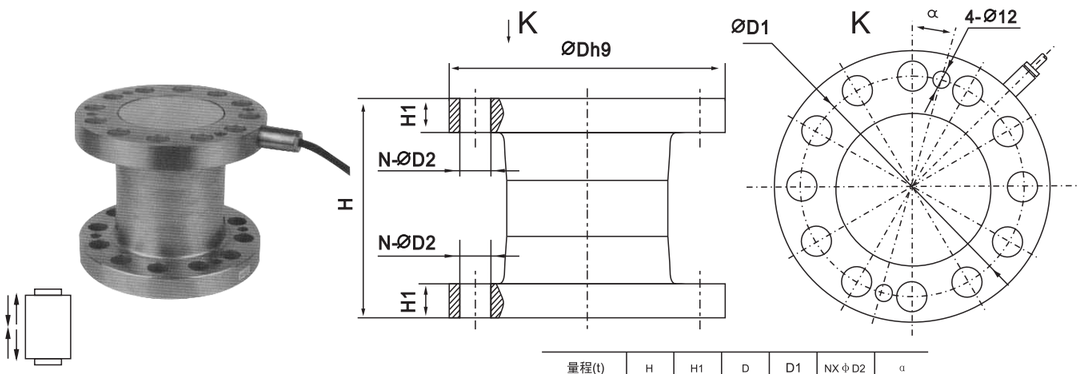

量程(t)	H	H1	D	D1	NX φ D2	α
40,60	160	25	197	160	12x φ 22	15°
100	230	40	240	200	12x φ 26	15°
150~200	326	57	305	250	12x φ 33	15°
300	358	69	415	360	18x φ 33	10°

拉压测试场合、试验机
Tension testing situation,testing machine

TECHNICAL PARAMETER

6Wires:Exc+(红,Red);Exc-(黑,Black);Sig+(绿,Green);Sig-(白,White);Sen+(蓝,Blue);Sen-(黄,Yellow)

额定载荷 Rated capacities(Emax)	40,50,60,100,150,200,300t	温度补偿范围 Temperature range, compensated	–10℃~+40℃
灵敏度 Sensitivity	2.0±0.01mV/V	工作温度范围 Temperature range, operating	-30~+70℃
综合误差 Total error	±0.3%F.S	安全过载 Maximum safe overload	150%F.S
蠕变(30分钟)Creep error (30min)	±0.05%F.S	极限过载 Ultimate overload	200%F.S
零点平衡 Zero balance	±1%F.S	推荐激励电压 Excitation,recommend	10~12V DC
零点温度影响 TCO	±0.03%F.S/10℃	最大激励电压 Excitation,maximum	15V DC
输出温度影响 TC SPAN	±0.03%F.S/10℃	防封等级 Protection class	IP67
输入阻抗 Input impedance	750±10Ω	材质 Construction	合金钢Alloy Steel
输出阻抗 Output impedance	702±3Ω ;702±5Ω（C≥15m）	电缆 Cable	Length:14m(40~100t),20m(150~300t)
绝缘电阻 Insulation impedance	≥5000MΩ		Diameter: φ 8mm

ZSNC-A Loadcell

ZSNC-A

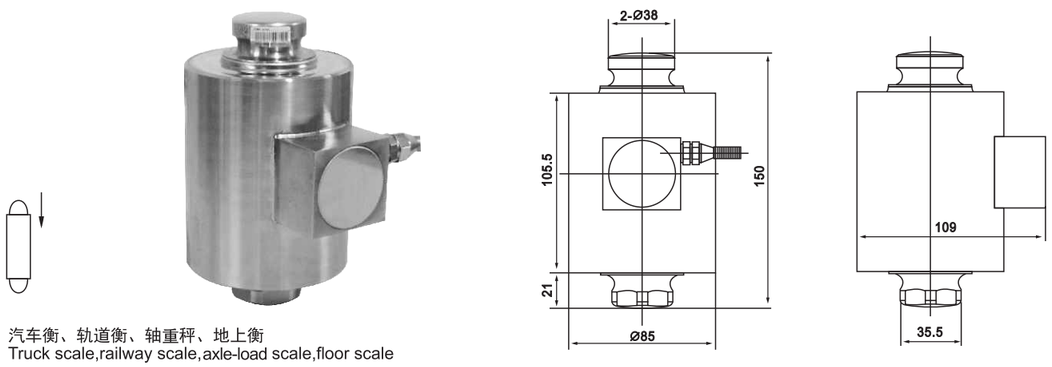

汽车衡、轨道衡、轴重秤、地上衡
Truck scale,railway scale,axle-load scale,floor scale

TECHNICAL PARAMETER

6Wires:Exc+(红,Red);Exc-(黑,Black);Sig+(绿,Green);Sig-(白,White);Sen+(蓝,Blue);Sen-(黄,Yellow)

额定载荷 Rated capacities(Emax)	20,25,30,40,50t	温度补偿范围 Temperature range, compensated	–10℃~+40℃
灵敏度 Sensitivity	2.0±0.003mV/V	工作温度范围 Temperature range, operating	-30~+70℃
综合误差 Total error	±0.03%F.S,±0.05%F.S	安全过载 Maximum safe overload	150%F.S
蠕变(30分钟)Creep error (30min)	±0.02%F.S	极限过载 Ultimate overload	200%F.S
零点平衡 Zero balance	±1%F.S	推荐激励电压 Excitation,recommend	10~12V DC
零点温度影响 TCO	±0.02%F.S/10℃	最大激励电压 Excitation,maximum	15V DC
输出温度影响 TC SPAN	±0.02%F.S/10℃	防封等级 Protection class	IP68
输入阻抗 Input impedance	1160±10Ω	材质 Construction	合金钢Alloy Steel
输出阻抗 Output impedance	1005±5Ω	电缆 Cable	Length:12m(20~25t),14m(30t),16m(40~50t)
绝缘电阻 Insulation impedance	≥5000MΩ		Diameter: φ 6mm

ZSC-A/-ASS Loadcell

ZSC-A/-ASS

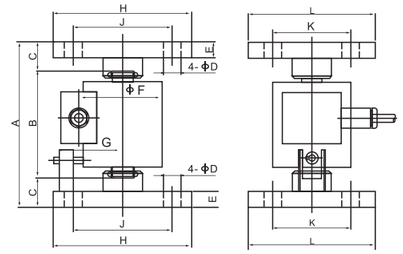

汽车衡、轨道衡、轴重秤、地上衡、仓储秤
Truck scale,railway scale,axle-load scale,
floor scale,warehouse scale

额定载荷(t) Rated Load	A	B	C	D	E	F	G	H	J	K	L
10	170	110	30	18	16	80	62.5	140	100	80	130
20	175	115	30	18	19	90	69.5	140	100	80	130
30	205	125	40	22	22	100	76	190	130	110	170
50,70	255	155	50	22	25	125	88.8	200	140	120	180
100,150	340	200	70	26	32	165	111.8	240	160	160	230
200,300,400	495	275	110	39	45	223	136.5	340	250	250	340

TECHNICAL PARAMETER

6Wires:Exc+(红,Red);Exc-(黑,Black);Sig(信号)+(绿,Green);Sig(信号)-(白,White);
Sen+(反馈)+(蓝,Blue);Sen-(反馈)-(黄,Yellow)

额定载荷 Rated capacities(Emax)	10,20,30,50,70,100,150,200,300,400t	温度补偿范围 Temperature range, compensated	–10℃~+40℃
灵敏度 Sensitivity	2.0±0.002mV/V	工作温度范围 Temperature range, operating	-30~+70℃
综合误差 Total error	±0.03%F.S(10~60t);±0.05%F.S（70~100t）±0.1%F.S(150~400t)	安全过载 Maximum safe overload	150%F.S
蠕变(30分钟)Creep error (30min)	±0.03，±0.05%F.S	极限过载 Ultimate overload	200%F.S
零点平衡 Zero balance	±1%F.S	推荐激励电压 Excitation,recommend	10~12V DC
零点温度影响 TCO	±0.02%F.S/10℃	最大激励电压 Excitation,maximum	15V DC
输出温度影响 TC SPAN	±0.02%F.S/10℃	防封等级 Protection class	IP68
输入阻抗 Input impedance	400±20Ω	材质 Construction	合金钢Alloy Steel 不锈钢Stainless Steel
输出阻抗 Output impedance	352±3Ω；352±5Ω（L≥15m）	电缆 Cable	Length=L:8m(10t),12m(20t),14m(30t),16m(50~150t),20m(200~400t),
绝缘电阻 Insulation impedance	≥5000MΩ		Diameter: φ 6mm(10t), φ 8mm(20~400t)

ZSEFB-A Loadcell

ZSEFB-A

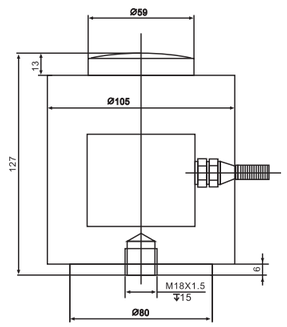

汽车衡、轨道衡、轴重秤、地上秤
Truck scale,railway scale,axle-load scale,floor scale

TECHNICAL PARAMETER

6Wires:Exc+(红,Red);Exc-(黑,Black);Sig+(绿,Green);Sig-(白,White);Sen+(蓝,Blue);Sen-(黄,Yellow)

额定载荷 Rated capacities(Emax)	100klb	温度补偿范围 Temperature range, compensated	–10℃~+40℃
灵敏度 Sensitivity	2.0±0.002mV/V	工作温度范围 Temperature range, operating	-30~+70℃
综合误差 Total error	±0.03%F.S	安全过载 Maximum safe overload	150%F.S
蠕变(30分钟)Creep error (30min)	±0.02%F.S	极限过载 Ultimate overload	200%F.S
零点平衡 Zero balance	±1%F.S	推荐激励电压 Excitation,recommend	10~12V DC
零点温度影响 TCO	±0.02%F.S/10℃	最大激励电压 Excitation,maximum	15V DC
输出温度影响 TC SPAN	±0.02%F.S/10℃	防封等级 Protection class	IP68
输入阻抗 Input impedance	450±10Ω	材质 Construction	合金钢Alloy Steel
输出阻抗 Output impedance	480±5Ω	电缆 Cable	Length:20m
绝缘电阻 Insulation impedance	≥5000MΩ		Diameter: φ 6mm

ZSG-A/-ASS/ZSGY-A/-ASS Loadcell

ZSG-A/-ASS/ZSGY-A/-ASS

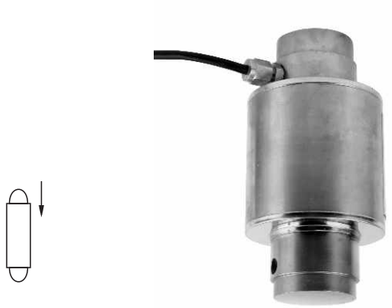

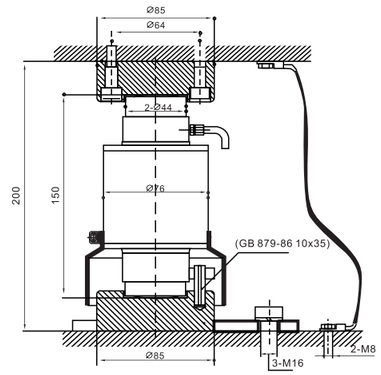

汽车衡、轨道衡、轴重秤、地上衡
Truck scale,railway scale,axle-load scale, floor scale

TECHNICAL PARAMETER| 4Wires:Exc+(红,Red);Exc-(黑,Black);Sig+(绿,Green);Sig-(白,White)

额定载荷 Rated capacities(Emax)	10,15,20,25,30,40,50t	温度补偿范围 Temperature range, compensated	-10℃~+40℃
灵敏度 Sensitivity	2.0±0.002mV/V	工作温度范围 Temperature range, operating	-30~+70℃
精度等级 Accuracy class	C2-C3	安全过载 Maximum safe overload	150%F.S
		极限过载 Ultimate overload	250%F.S
零点平衡 Zero balance	±1%F.S	推荐激励电压 Excitation,recommend	10~12V DC
零点温度影响 TCO	±0.02%F.S/10℃	最大激励电压 Excitation,maximum	15V DC
输出温度影响 TC SPAN	±0.02%F.S/10℃	防封等级 Protection class	IP68
输入阻抗 Input impedance	400±20Ω(ZSG),700±20Ω(ZSGY)	材质 Construction	合金钢Alloy Steel 不锈钢Stainless Steel
输出阻抗 Output impedance	352±3Ω；352±5Ω（L≥15m)(ZSG),706±7Ω(ZSGY)	电缆 Cable	Length=L:8m(10t),10m(15t),12m(20,25t),14m(30t),16m(40~50t)
绝缘电阻 Insulation impedance	≥5000MΩ		Diameter: φ5mm

ZSFL Loadcell

ZSFL

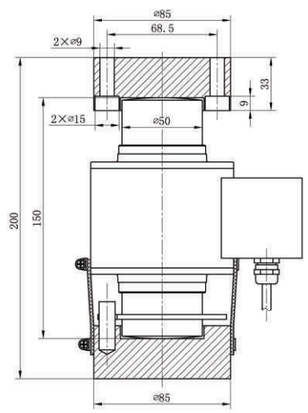

汽车衡、轨道衡
Truck scale,railway scale

TECHNICAL PARAMETER| 4Wires:Exc+(红,Red);Exc-(黑,Black);Sig+(绿,Green);Sig-(白,White)

额定载荷 Rated capacities(Emax)	10,20,30,40,50t	温度补偿范围 Temperature range, compensated	-10℃~+40℃
灵敏度 Sensitivity	2.0±0.002mV/V	工作温度范围 Temperature range, operating	-30~+70℃
综合误差 Total error	±0.03%F.S,±0.05%F.S	安全过载 Maximum safe overload	150%F.S
蠕变(30分钟)Creep error (30min)	±0.02%F.S	极限过载 Ultimate overload	200%F.S
零点平衡 Zero balance	±1%F.S	推荐激励电压 Excitation,recommend	10~12V DC
零点温度影响 TCO	±0.02%F.S/10℃	最大激励电压 Excitation,maximum	15V DC
输出温度影响 TC SPAN	±0.02%F.S/10℃	防封等级 Protection class	IP68
输入阻抗 Input impedance	700 ±35Ω	材质 Construction	合金钢Alloy Steel
输出阻抗 Output impedance	700±7Ω	电缆 Cable	Length:15m
绝缘电阻 Insulation impedance	≥5000MΩ		Diameter: φ5mm

ZSMCB-A Loadcell

ZSMCB-A

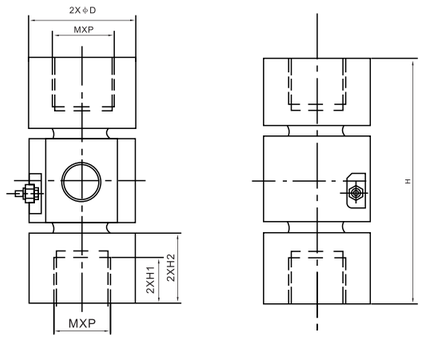

量程(t)	H	H1	H2	φD	MXP
20	185	38	57	78	M42x3
30,40	225	50	77	105	M56x3

大型起重机械、实验机
Big crane equipment,testing machine

TECHNICAL PARAMETER| 4Wires:Exc+(红,Red);Exc-(黑,Black);Sig+(绿,Green);Sig-(白,White)

额定载荷 Rated capacities(Emax)	20,30,40t	温度补偿范围 Temperature range, compensated	-10℃~+40℃
灵敏度 Sensitivity	2.0±0.005mV/V	工作温度范围 Temperature range, operating	-30~+70℃
综合误差 Total error	±0.2%F.S	安全过载 Maximum safe overload	120%F.S
蠕变(30分钟)Creep error (30min)	±0.05%F.S	极限过载 Ultimate overload	150%F.S
零点平衡 Zero balance	±1%F.S	推荐激励电压 Excitation,recommend	10~12V DC
零点温度影响 TCO	±0.02%F.S/10℃	最大激励电压 Excitation,maximum	15V DC
输出温度影响 TC SPAN	±0.02%F.S/10℃	防封等级 Protection class	IP68
输入阻抗 Input impedance	400±20Ω	材质 Construction	合金钢Alloy Steel
输出阻抗 Output impedance	352±3Ω	电缆 Cable	Length:12m
绝缘电阻 Insulation impedance	≥5000MΩ		Diameter: φ6mm

ILJ Loadcell

ILJ

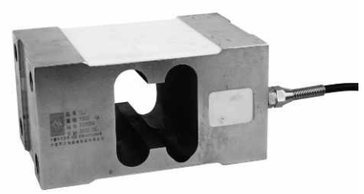

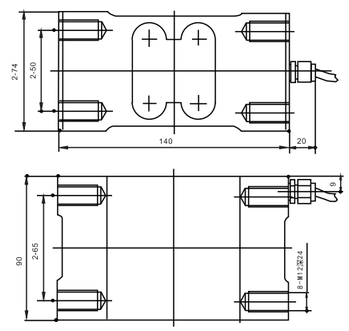

配料秤、包装秤、动态检测系统、台秤
Blending scale,packing scale,dynamic testing system,platform scale

TECHNICAL PARAMETER| 4Wires:Exc+(红,Red);Exc-(黑,Black);Sig+(绿,Green);Sig-(白,White)

额定载荷 Rated capacities(Emax)	300,600,1000kg,2t	温度补偿范围 Temperature range, compensated	-10℃~+40℃
灵敏度 Sensitivity	2.0±0.2mV/V	工作温度范围 Temperature range, operating	-30~+70℃
综合误差 Total error	±0.03%F.S	安全过载 Maximum safe overload	150%F.S
蠕变(30分钟)Creep error (30min)	±0.02%F.S ,±0.03%F.S	极限过载 Ultimate overload	200%F.S
零点平衡 Zero balance	±1%F.S	推荐激励电压 Excitation,recommend	10~12V DC
零点温度影响 TCO	±0.03%F.S/10℃	最大激励电压 Excitation,maximum	15V DC
输出温度影响 TC SPAN	±0.03%F.S/10℃	防封等级 Protection class	IP65
输入阻抗 Input impedance	400±20Ω	材质 Construction	合金钢Alloy Steel
输出阻抗 Output impedance	352±3Ω	电缆 Cable	Length:3m
绝缘电阻 Insulation impedance	≥5000MΩ		Diameter: φ5mm

ILC Loadcell

ILC

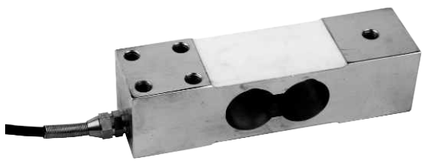

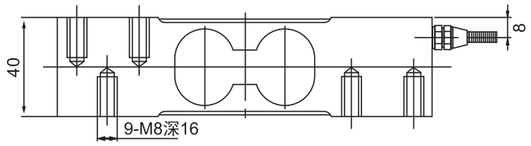

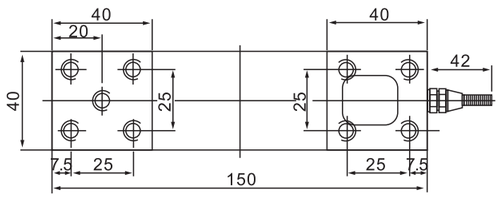

配料秤、包装秤、动态检测系统、台秤
Blending scale,packing scale,dynamic testing system,platform scale

TECHNICAL PARAMETER| 4Wires:Exc+(红,Red);Exc-(黑,Black);Sig+(绿,Green);Sig-(白,White)

额定载荷 Rated capacities(Emax)	50,75,100,120,150,200,250,300,500,750kg	温度补偿范围 Temperature range, compensated	–10℃~+40℃
灵敏度 Sensitivity	2.0±0.2mV/V	工作温度范围 Temperature range, operating	-30~+70℃
综合误差 Total error	±0.03%F.S	安全过载 Maximum safe overload	120%F.S
蠕变(30分钟)Creep error (30min)	±0.02%F.S ,±0.03%F.S	极限过载 Ultimate overload	200%F.S
零点平衡 Zero balance	±1%F.S	推荐激励电压 Excitation,recommend	10~12V DC
零点温度影响 TCO	±0.02%F.S/10℃	最大激励电压 Excitation,maximum	15V DC
输出温度影响 TC SPAN	±0.02%F.S/10℃	防封等级 Protection class	IP65
输入阻抗 Input impedance	400±20Ω	材质 Construction	合金钢Alloy Steel
输出阻抗 Output impedance	352±3Ω	电缆 Cable	Length:3m
绝缘电阻 Insulation impedance	≥5000MΩ		Diameter: φ5mm

ILCB Loadcell

ILCB

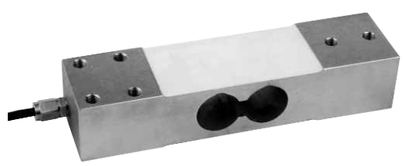

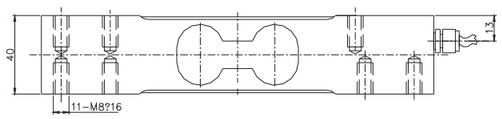

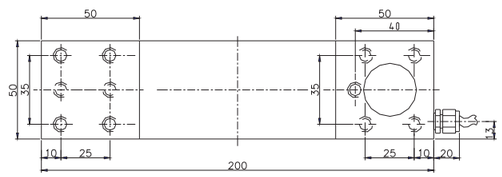

配料秤、包装秤、动态检测系统、台秤
Blending scale,packing scale,dynamic testing system,platform scale

TECHNICAL PARAMETER| 4Wires:Exc+(红,Red);Exc-(黑,Black);Sig+(绿,Green);Sig-(白,White)

额定载荷 Rated capacities(Emax)	200,300,500,750,1000,1500kg	温度补偿范围 Compensated temp range	–10℃~+40℃
灵敏度 Sensitivity	2.0±0.2mV/V	工作温度范围 Operating temp range	-30~+70℃
综合误差 Total error	±0.02%F.S;±0.03%F.S	安全过载 Safe over load	150%F.S
蠕变（30分钟）Creep erro (30min)	±0.02%F.S ,±0.03%F.S	极限过载 Ultimate over load	200%F.S
零点平衡 Zero balance	±1%F.S	推荐激励电压 Recommend excitation	10~12V DC
零点温度影响 TCO	±0.03%F.S/10℃	最大激励电压 Max excitation	15V DC
输出温度影响 TC SPAN	±0.03%F.S/10℃	密封等级 Environmental protection	IP65
输入阻抗 Input impedance	400±20Ω	材质 Material	合金钢Alloy Steel
输出阻抗 Output impedance	352±3Ω	电缆 Cable	Length:3m
绝缘电阻 Insulation impedance	≥5000MΩ		Diameter: φ5mm

ILB Loadcell

ILB

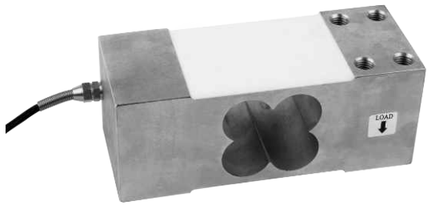

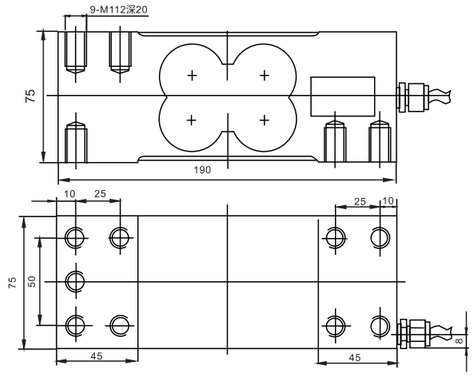

配料秤、包装秤、动态检测系统、台秤
Blending scale, packing scale,dynamic testing system,platform scale

TECHNICAL PARAMETER| 4Wires:Exc+(红,Red);Exc-(黑,Black);Sig+(绿,Green);Sig-(白,White)

额定载荷 Rated capacities(Emax)	50,100,200,300,500,750,1000,1500,2000kg	温度补偿范围 Temperature range, compensated	–10℃~+40℃
灵敏度 Sensitivity	2.0±0.2mV/V	工作温度范围 Temperature range, operating	-30~+70℃
综合误差 Total error	±0.03%F.S	安全过载 Maximum safe overload	120%F.S
蠕变(30分钟)Creep error (30min)	±0.02%F.S ,±0.03%F.S	极限过载 Ultimate overload	200%F.S
零点平衡 Zero balance	±1%F.S	推荐激励电压 Excitation,recommend	10~12V DC
零点温度影响 TCO	±0.02%F.S/10℃	最大激励电压 Excitation,maximum	15V DC
输出温度影响 TC SPAN	±0.02%F.S/10℃	防封等级 Protection class	IP65
输入阻抗 Input impedance	400±20Ω	材质 Construction	合金钢Alloy Steel
输出阻抗 Output impedance	352±3Ω	电缆 Cable	Length:3m
绝缘电阻 Insulation impedance	≥5000MΩ		Diameter: φ5mm

ILF Loadcell

ILF

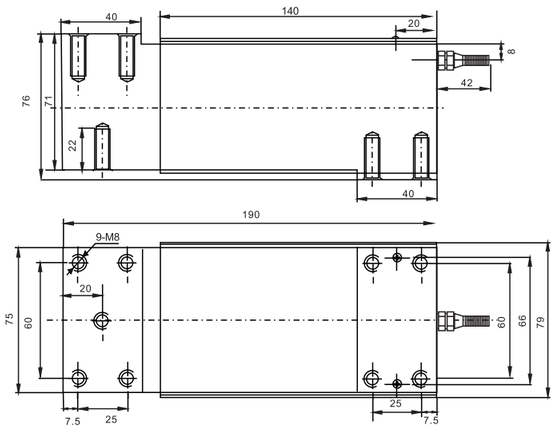

配料秤、包装秤、动态检测系统、台秤
Blending scale, packing scale,dynamic testing system,platform scale

TECHNICAL PARAMETER| 4Wires:Exc+(红,Red);Exc-(黑,Black);Sig+(绿,Green);Sig-(白,White)

额定载荷 Rated capacities(Emax)	50,75,100,120,200,250,300,500,1000kg	温度补偿范围 Temperature range, compensated	–10℃~+40℃
灵敏度 Sensitivity	2.0±0.2mV/V	工作温度范围 Temperature range, operating	-30~+70℃
综合误差 Total error	±0.03%F.S	安全过载 Maximum safe overload	150%F.S
蠕变(30分钟)Creep error (30min)	±0.02%F.S , ± 0.03%F.S	极限过载 Ultimate overload	200%F.S
零点平衡 Zero balance	±1%F.S	推荐激励电压 Excitation,recommend	10~12V DC
零点温度影响 TCO	±0.02%F.S/10℃	最大激励电压 Excitation,maximum	15V DC
输出温度影响 TC SPAN	±0.02%F.S/10℃	防封等级 Protection class	IP65
输入阻抗 Input impedance	400±20Ω	材质 Construction	合金钢Alloy Steel
输出阻抗 Output impedance	352±3Ω	电缆 Cable	Length:3m
绝缘电阻 Insulation impedance	≥5000MΩ		Diameter: φ5mm

ILE(-SS) Load cell

ILE(-SS)

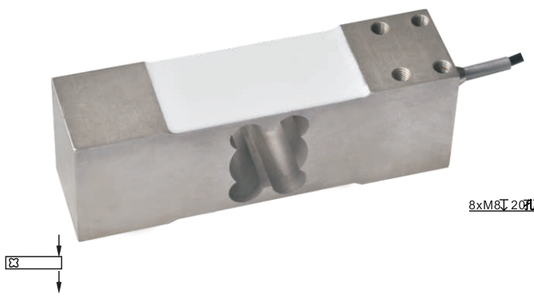

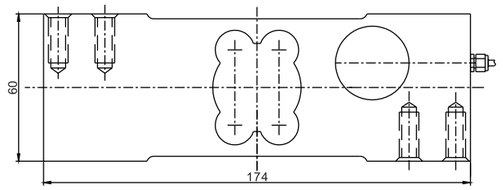

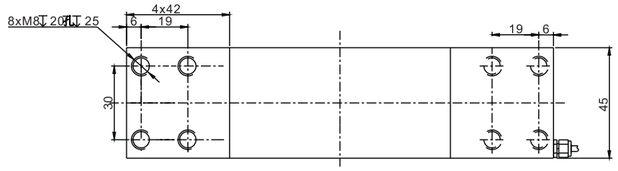

台秤、各种压式测力装置
Platform scale,all kinds of compression testing devices

TECHNICAL PARAMETER| 4Wires:Exc+(红,Red);Exc-(黑,Black);Sig+(绿,Green);Sig-(白,White)

额定载荷 Rated load	40,45,50,60,65,100,150,200,250,300,500,800kg	绝缘电阻 Insulation resistance	≥2000MΩ(50V DC)
灵敏度 Sensitivity	2.0±0.2mV/V	工作温度范围 Operating Temp Range	-20~+50℃
精度等级 Accuracy class	OIML C3(approving)	安全过载 Safe load limit	150%F.S
蠕变（30分钟）Creep(30min)	±166ppm	极限过载 Lateral load limit	300%F.S
零点平衡 Zero balance	±3%Emax	推荐激励电压 Recommend excitation	10V DC
零点温度影响 TCO	±17.5ppm℃	最大激励电压 Maximum excitation	15V DC
输出温度影响 TC SPAN	+20℃~+40℃, ±17.5ppm/℃	密封等级Protection Class	IP65
	-10℃~+20℃, ±11.67ppm/℃	材质Construction 合金钢 Alloy Steel	不锈钢 Stainless Steel
输入阻抗 Input resistance	404±15Ω	电缆Cable	Length:3m
输出阻抗 Output resistance	382±3Ω		Diameter: ϕ5mm
推荐安装平台 Max.piatform size	500×500mm	推荐安装力矩 Installation torquere,commended	25N・m

ILEB Loadcell

ILEB

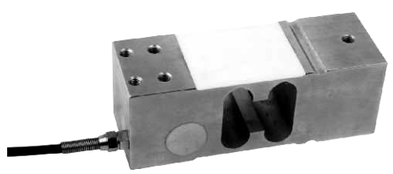

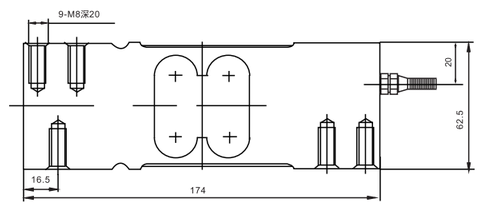

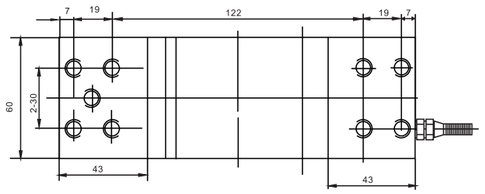

配料秤、包装秤、动态检测系统、台秤
Blending scale, packing scale,dynamic testing system,platform scale

TECHNICAL PARAMETER| 4Wires:Exc+(红,Red);Exc-(黑,Black);Sig+(绿,Green);Sig-(白,White)

额定载荷 Rated capacities(Emax)	50,100,150,200,250,300,500,800,1000kg	温度补偿范围 Temperature range, compensated	-10℃~+40℃
灵敏度 Sensitivity	2.0±0.2mV/V	工作温度范围 Temperature range, operating	-30~+70℃
综合误差 Total error	±0.03%F.S	安全过载 Maximum safe overload	150%F.S
蠕变(30分钟)Creep error (30min)	±0.03%F.S	极限过载 Ultimate overload	200%F.S
零点平衡 Zero balance	±1%F.S	推荐激励电压 Excitation,recommend	10~12V DC
零点温度影响 TCO	±0.02%F.S/10℃	最大激励电压 Excitation,maximum	15V DC
输出温度影响 TC SPAN	±0.02%F.S/10℃	防封等级 Protection class	IP65
输入阻抗 Input impedance	400±20Ω	材质 Construction	合金钢Alloy Steel
输出阻抗 Output impedance	352±2Ω	电缆 Cable	Length:3m
绝缘电阻 Insulation impedance	≥5000MΩ		Diameter: ϕ5mm

ILEC/-A/-SS Loadcell

ILEC/-A/-SS

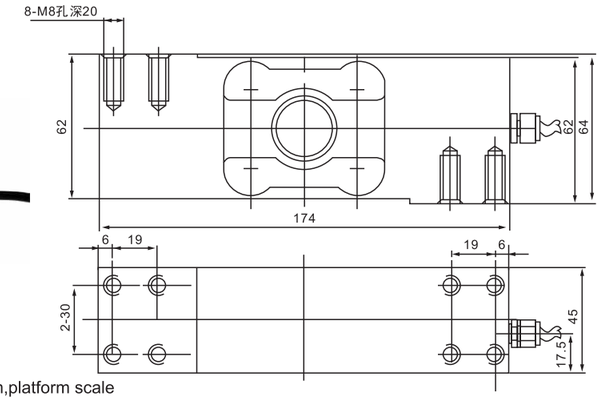

配料秤、包装秤、动态检测系统、台秤
Blending scale, packing scale,dynamic testing system,platform scale

TECHNICAL PARAMETER| 4Wires:Exc+(红,Red);Exc-(黑,Black);Sig+(绿,Green);Sig-(白,White)

额定载荷 Rated capacities(Emax)	250,300,500,750,800,1000kg	温度补偿范围 Temperature range, compensated	-10℃~+40℃
灵敏度 Sensitivity	2.0±0.2mV/V	工作温度范围 Temperature range, operating	-30~+70℃
综合误差 Total error	±0.03%F.S(合金钢alloy steel);0.05%F.S(不锈钢stainless steel)	安全过载 Maximum safe overload	150%F.S
蠕变(30分钟)Creep error (30min)	±0.03%F.S	极限过载 Ultimate overload	200%F.S
零点平衡 Zero balance	±1%F.S	推荐激励电压 Excitation,recommend	10~12V DC
零点温度影响 TCO	±0.02%F.S/10℃	最大激励电压 Excitation,maximum	15V DC
输出温度影响 TC SPAN	±0.02%F.S/10℃	防封等级 Protection class	IP65,IP68(-A,-ASS)
输入阻抗 Input impedance	400±20Ω	材质 Construction 合金钢Alloy Steel	不锈钢Stainless Steel
输出阻抗 Output impedance	352±3Ω	电缆 Cable	Length:6m
绝缘电阻 Insulation impedance	≥5000MΩ		Diameter: ϕ5mm

ILK(-SS) Load cell

ILK(-SS)

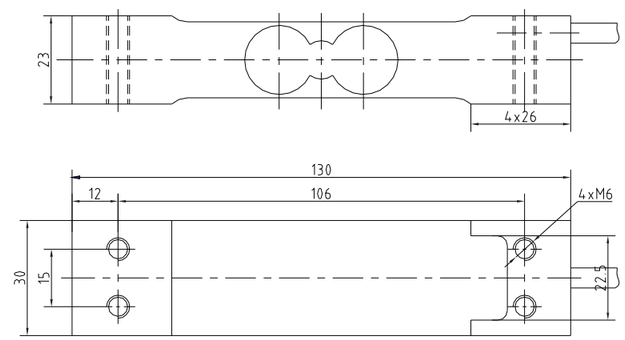

各种台秤
All kinds of platform scale

TECHNICAL PARAMETER| 4Wires:Exc+(红,Red);Exc-(黑,Black);Sig+(绿,Green);Sig-(白,White)

额定载荷 Rated load	5,8,10,15,20,25,30,35,40kg	绝缘电阻 Insulation resistance	≥2000MΩ(50V DC)
灵敏度 Sensitivity	2.0±0.2mV/V	工作温度范围 Operating Temp Range	-20~+50℃
精度等级 Accuracy class		安全过载 Safe load limit	150%F.S
蠕变（30分钟）Creep(30min)	±166ppm	极限过载 Lateral load limit	300%F.S
零点平衡 Zero balance	±3%Emax	推荐激励电压 Recommend excitation	10V DC
零点温度影响 TCO	±17.5ppm℃	最大激励电压 Maximum excitation	15V DC
输出温度影响 TC SPAN	+20℃~+40℃, ±17.5ppm/℃	密封等级Protection Class	IP65
	-10℃~+20℃, ±11.67ppm/℃	材质Construction 合金钢 Alloy Steel	不锈钢 Stainless Steel
输入阻抗 Input resistance	404±15Ω	电缆Cable	Length:1m
输出阻抗 Output resistance	350±3Ω		Diameter: ϕ5mm
推荐安装平台 Max.piatform size	300×300mm	推荐安装力矩 Installation torquere,commended	10N・m

ILKB Loadcell

ILKB

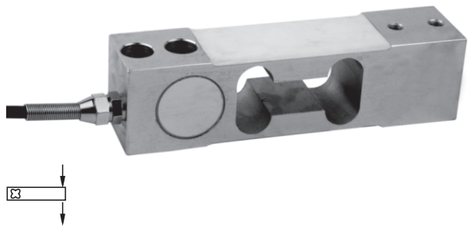

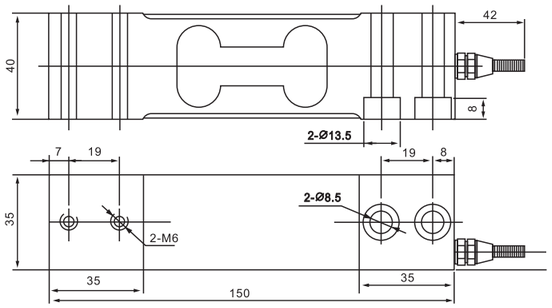

电子台秤、配料秤、包装秤、动态检测系统、台秤
Electric platform scale,blending scale,packingscale,dynamic testing system,platform scale

TECHNICAL PARAMETER| 4Wires:Exc+(红,Red);Exc-(黑,Black);Sig+(绿,Green);Sig-(白,White)

额定载荷 Rated capacities(Emax)	60,100,150,200kg	温度补偿范围 Temperature range, compensated	–10℃~+40℃
灵敏度 Sensitivity	2.0±0.2mV/V	工作温度范围 Temperature range, operating	-30~+70℃
综合误差 Total error	±0.03%F.S	安全过载 Maximum safe overload	150%F.S
蠕变(30分钟)Creep error (30min)	±0.03%F.S	极限过载 Ultimate overload	200%F.S
零点平衡 Zero balance	±1%F.S	推荐激励电压 Excitation,recommend	10~12V DC
零点温度影响 TCO	±0.02%F.S/10℃	最大激励电压 Excitation,maximum	15V DC
输出温度影响 TC SPAN	±0.02%F.S/10℃	防封等级 Protection class	IP65
输入阻抗 Input impedance	400±20Ω	材质 Construction	合金钢Alloy Steel
输出阻抗 Output impedance	352±3Ω	电缆 Cable	Length:3m
绝缘电阻 Insulation impedance	≥5000MΩ		Diameter: ϕ5mm

IL Load cell

IL

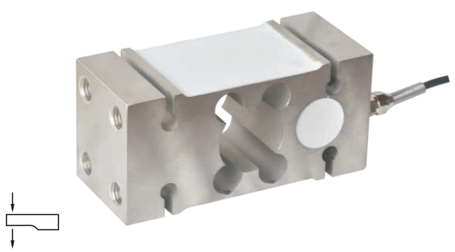

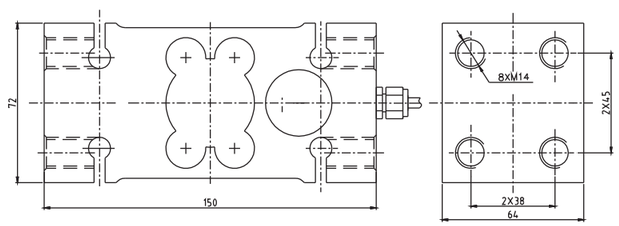

各种台秤、蝌蚪秤
All kinds of platform scale、tadpole scale

TECHNICAL PARAMETER| 4Wires:Exc+(红,Red);Exc-(黑,Black);Sig+(绿,Green);Sig-(白,White)

额定载荷 Rated load	50,100,150,200,250,300,500,750Kg 1t,2t	绝缘电阻 Insulation resistance	≥2000MΩ(50V DC)
灵敏度 Sensitivity	2.0±0.2mV/V	工作温度范围 Operating Temp Range	–20~+50℃
精度等级 Accuracy class	OIML C3	安全过载 Safe load limit	150%F.S
蠕变（30分钟）Creep(30min)	±166ppm	极限过载 Lateral load limit	300%F.S
零点平衡 Zero balance	±3%Emax	推荐激励电压 Recommend excitation	10V DC
零点温度影响 TCO	±17.5ppm℃	最大激励电压 Maximum excitation	15V DC
输出温度影响 TC SPAN	+20℃~+40℃, ±17.5ppm/℃	密封等级Protection Class	IP65
	–10℃~+20℃, ±11.67ppm/℃	材质Construction	合金钢 Alloy Steel
输入阻抗 Input resistance	382±15Ω	电缆Cable	Length:3m
输出阻抗 Output resistance	350±3Ω		Diameter: ϕ5mm
推荐安装平台 Max.piatform size	800×800mm	推荐安装力矩 Installation torquere,commended	35N・m

ILGB/–A/–SS/–ASS Loadcell

ILGB/–A/–SS/–ASS

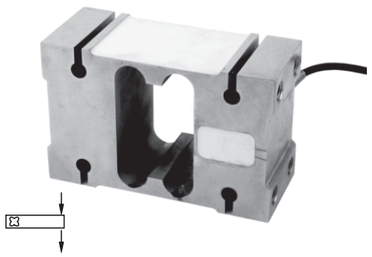

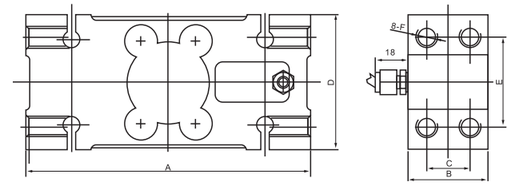

额定载荷(kg) Rated Load	A	B	C	D	E	F
（胶封）50~200	156	44	24	75	50	M12
250~500	146	60	36	95	70	M12
750~2000	176	76	46	125	95	M18

各种台秤
All kinds of platform scale

TECHNICAL PARAMETER| 4Wires:Exc+(红,Red);Exc-(黑,Black);Sig+(绿,Green);Sig-(白,White)

额定载荷 Rated capacities(Emax)	50,100,200,250,500,750,1000,2000kg	温度补偿范围 Temperature range, compensated	–10℃~+40℃
灵敏度 Sensitivity	2.0±0.2mV/V	工作温度范围 Temperature range, operating	-30~+70℃
综合误差 Total error	±0.03%F.S	安全过载 Maximum safe overload	150%F.S
蠕变(30分钟)Creep error (30min)	±0.02%F.S ,±0.03%F.S	极限过载 Ultimate overload	200%F.S
零点平衡 Zero balance	±1%F.S	推荐激励电压 Excitation,recommend	10~12V DC
零点温度影响 TCO	±0.02%F.S/10℃	最大激励电压 Excitation,maximum	15V DC
输出温度影响 TC SPAN	±0.02%F.S/10℃	防封等级 Protection class	IP65,IP68(-A,-ASS)
输入阻抗 Input impedance	400±20Ω	材质 Construction	合金钢Alloy Steel 不锈钢Stainless Steel
输出阻抗 Output impedance	352±3Ω	电缆 Cable	Length:3m
绝缘电阻 Insulation impedance	≥5000MΩ		Diameter: ϕ5mm

ILQ Load cell

IILQ

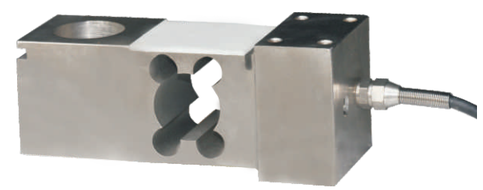

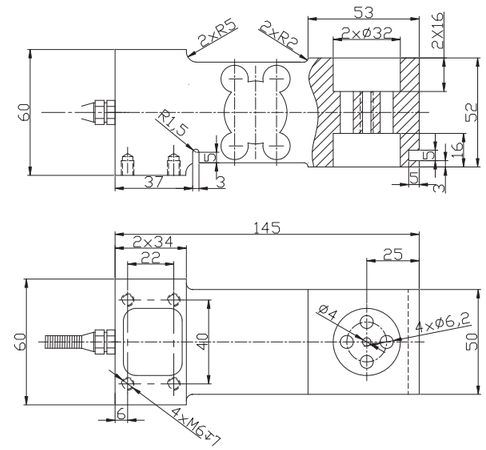

平台秤、配料秤
Platform scale,blending scale

TECHNICAL PARAMETER| 4Wires:Exc+(红,Red);Exc-(黑,Black);Sig+(绿,Green);Sig-(白,White)

额定载荷 Rated capacities(Emax)	50kg	温度补偿范围 Temperature range, compensated	–10℃~+40℃
灵敏度 Sensitivity	1.0±0.002mV/V	工作温度范围 Temperature range, operating	-30~+70℃
综合误差 Total error	±0.03%F.S	安全过载 Maximum safe overload	120%F.S
蠕变(30分钟)Creep error (30min)	±0.02%F.S	极限过载 Ultimate overload	150%F.S
零点平衡 Zero balance	±1%F.S	推荐激励电压 Excitation,recommend	10~12V DC
零点温度影响 TCO	±0.02%F.S/10℃	最大激励电压 Excitation,maximum	15V DC
输出温度影响 TC SPAN	±0.02%F.S/10℃	防护等级 Protection class	IP67
输入阻抗 Input impedance	400±20Ω	材质 Construction	合金钢Alloy Steel
输出阻抗 Output impedance	352±3Ω	电缆 Cable	
绝缘电阻 Insulation impedance	≥5000MΩ	Length: 12m	Diameter: ϕ5mm

SSC-A/-ASS Loadcell

SSC-A/-ASS

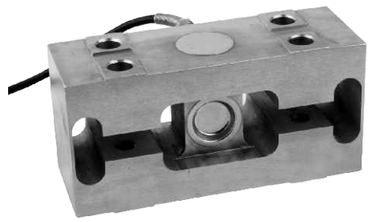

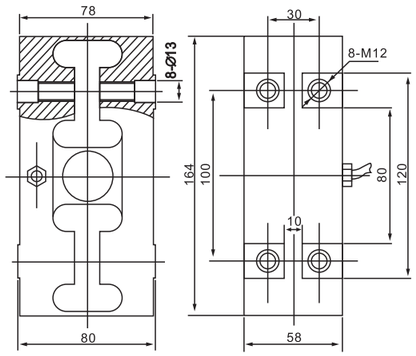

叉车秤、起重机械
Forklift scale,crane mechanism

TECHNICAL PARAMETER| 4Wires:Exc+(红,Red);Exc-(黑,Black);Sig+(绿,Green);Sig-(白,White)

额定载荷 Rated capacities(Emax)	550,880kg	温度补偿范围 Temperature range, compensated	-10℃~+40℃
灵敏度 Sensitivity	2.0±0.002mV/V	工作温度范围 Temperature range, operating	-30~+70℃
综合误差 Total error	±0.1%F.S	安全过载 Maximum safe overload	150%F.S
蠕变(30分钟)Creep error (30min)	±0.03%F.S	极限过载 Ultimate overload	250%F.S
零点平衡 Zero balance	±1%F.S	推荐激励电压 Excitation,recommend	10~12V DC
零点温度影响 TCO	±0.02%F.S/10℃	最大激励电压 Excitation,maximum	15V DC
输出温度影响 TC SPAN	±0.02%F.S/10℃	防封等级 Protection class	IP68
输入阻抗 Input impedance	400±20Ω	材质 Construction	Alloy Steel 不锈钢Stainless Steel
输出阻抗 Output impedance	352±3Ω	电缆 Cable	Length:3m
绝缘电阻 Insulation impedance	≥5000MΩ		Diameter: ϕ5mm

UH Loadcell

UH

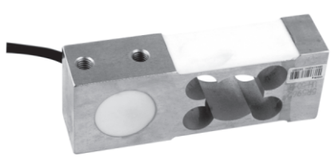

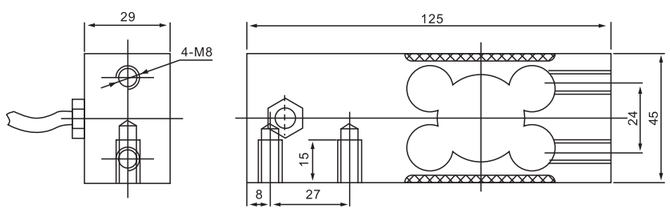

台秤
platform scale

TECHNICAL PARAMETER| 4Wires:Exc+(红,Red);Exc-(黑,Black);Sig+(绿,Green);Sig-(白,White)

额定载荷 Rated capacities(Emax)	20，30，40，50kg	温度补偿范围 Temperature range, compensated	-10℃~+40℃
灵敏度 Sensitivity	1.8±0.1mV/V	工作温度范围 Temperature range, operating	-30~+70℃
综合误差 Total error	±0.05%F.S	安全过载 Maximum safe overload	120%F.S
蠕变(30分钟)Creep error (30min)	±0.02%F.S ,±0.03%F.S	极限过载 Ultimate overload	150%F.S
零点平衡 Zero balance	±1%F.S	推荐激励电压 Excitation,recommend	10~12V DC
零点温度影响 TCO	±0.02%F.S/10℃	最大激励电压 Excitation,maximum	15V DC
输出温度影响 TC SPAN	±0.02%F.S/10℃	防封等级 Protection class	IP65
输入阻抗 Input impedance	400±20Ω	材质 Construction	合金钢Alloy Steel
输出阻抗 Output impedance	352±3Ω	电缆 Cable	Length:2m
绝缘电阻 Insulation impedance	≥5000MΩ		Diameter: ϕ5mm

UHB Load cell

UHB

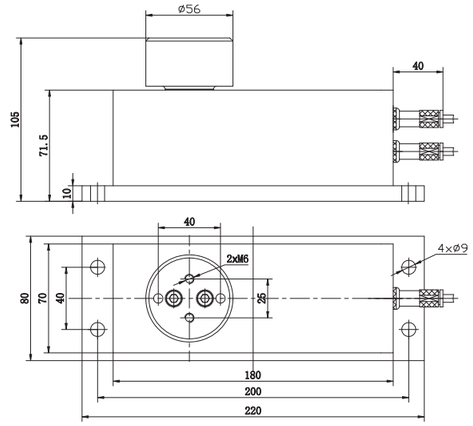

灌装称量
Tank weighing

TECHNICAL PARAMETER| 4Wires:Exc+(红,Red);Exc-(黑,Black);Sig+(绿,Green);Sig-(白,White)

额定载荷 Rated capacities(Emax)	5,10,20,50,75kg	温度补偿范围 Temperature range, compensated	-10℃~+40℃
灵敏度 Sensitivity	1.0±0.03mV/V	工作温度范围 Temperature range, operating	-30~+70℃
综合误差 Total error	±0.03%F.S	安全过载 Maximum safe overload	150%F.S
蠕变(30分钟)Creep error (30min)	±0.02%F.S	极限过载 Ultimate overload	200%F.S
零点平衡 Zero balance	±1%F.S	推荐激励电压 Excitation,recommend	10~12V DC
零点温度影响 TCO	±0.03%F.S/10℃	最大激励电压 Excitation,maximum	15V DC
输出温度影响 TC SPAN	±0.02%F.S/10℃	防护等级 Protection class	IP67
输入阻抗 Input impedance	400±20Ω	材质 Construction	合金钢Alloy Steel
输出阻抗 Output impedance	352±3Ω	电缆 Cable	
绝缘电阻 Insulation impedance	≥5000MΩ	Length: 2m	Diameter: ϕ5mm

US/-SS/-A/-ASS Loadcell

US/-SS/-A/-ASS

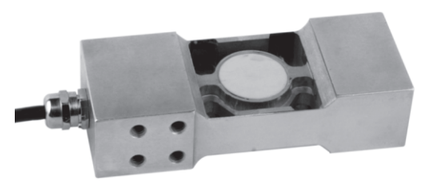

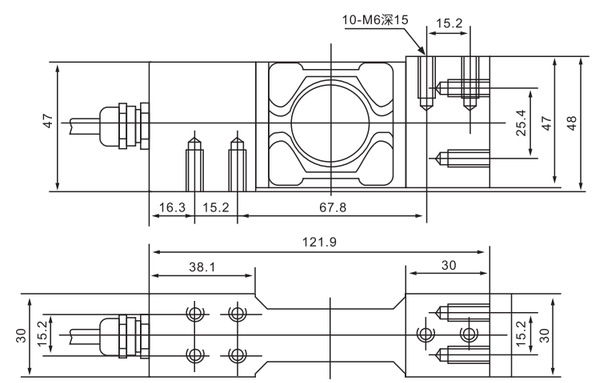

台秤
platform scale

TECHNICAL PARAMETER| 4Wires:Sig+(绿,Green);Exc-(黑,Black);Sig-(白,White);Exc+(红,Red)

额定载荷 Rated capacities(Emax)	20,50kg	温度补偿范围 Temperature range, compensated	-10℃~+40℃
灵敏度 Sensitivity	2.0±0.2mV/V	工作温度范围 Temperature range, operating	-30~+70℃
综合误差 Total error	±0.05%F.S	安全过载 Maximum safe overload	120%F.S
蠕变(30分钟)Creep error (30min)	±0.03%F.S	极限过载 Ultimate overload	150%F.S
零点平衡 Zero balance	±1%F.S	推荐激励电压 Excitation,recommend	10~12V DC
零点温度影响 TCO	±0.02%F.S/10℃	最大激励电压 Excitation,maximum	15V DC
输出温度影响 TC SPAN	±0.02%F.S/10℃	防封等级 Protection class	IP65,IP68(-A,-ASS)
输入阻抗 Input impedance	1106±20Ω	材质 Construction	合金钢Alloy Steel 不锈钢 Stainless steel
输出阻抗 Output impedance	1001±3 Ω	电缆 Cable	Length:3m
绝缘电阻 Insulation impedance	≥5000MΩ		Diameter: ϕ 5.4mm

USB Loadcell

USB

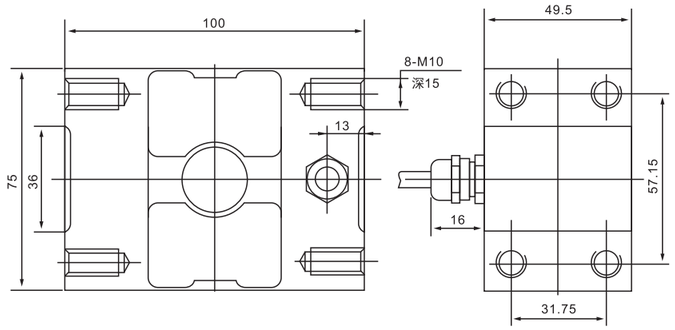

台秤
platform scale

TECHNICAL PARAMETER| 4Wires:Exc+(红,Red);Exc-(黑,Black);Sig+(绿,Green);Sig-(白,White)

额定载荷 Rated capacities(Emax)	150kg	温度补偿范围 Temperature range, compensated	–10℃~+40℃
灵敏度 Sensitivity	2.0±0.2mV/V	工作温度范围 Temperature range, operating	-30~+70℃
综合误差 Total error	±0.05%F.S	安全过载 Maximum safe overload	150%F.S
蠕变(30分钟)Creep error (30min)	±0.03%F.S	极限过载 Ultimate overload	200%F.S
零点平衡 Zero balance	±1%F.S	推荐激励电压 Excitation,recommend	10~12V DC
零点温度影响 TCO	±0.03%F.S/10℃	最大激励电压 Excitation,maximum	15V DC
输出温度影响 TC SPAN	±0.03%F.S/10℃	防封等级 Protection class	IP65
输入阻抗 Input impedance	1106±20Ω	材质 Construction	合金钢Alloy Steel
输出阻抗 Output impedance	1002±3Ω	电缆 Cable	Length:3m
绝缘电阻 Insulation impedance	≥5000MΩ		Diameter: ϕ5.4mm

SOK Loadcell

SOK

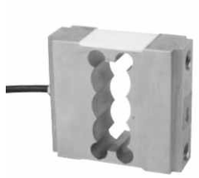

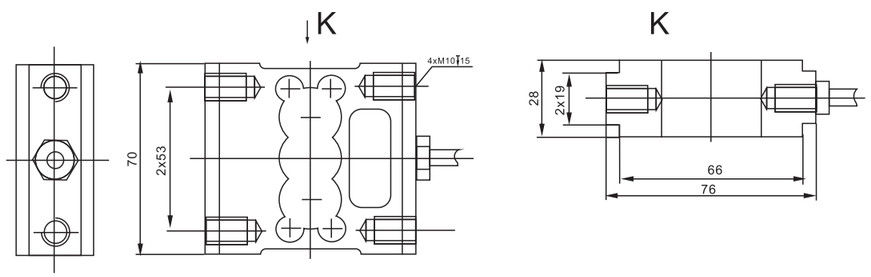

电子台秤、配料秤、包装秤、动态检测系统、台秤
Electric platform,blending scale,packing scale,dynamic testing system,platform scale

TECHNICAL PARAMETER| 4Wires:Exc+(红,Red);Exc-(黑,Black);Sig+(绿,Green);Sig-(白,White)

额定载荷 Rated capacities(Emax)	50,100,200,300kg	温度补偿范围 Temperature range, compensated	–10℃~+40℃
灵敏度 Sensitivity	2.0±0.003mV/V	工作温度范围 Temperature range, operating	-30~+70℃
综合误差 Total error	±0.03%F.S	安全过载 Maximum safe overload	120%F.S
蠕变(30分钟)Creep error (30min)	±0.03%F.S	极限过载 Ultimate overload	150%F.S
零点平衡 Zero balance	±1%F.S	推荐激励电压 Excitation,recommend	10~12V DC
零点温度影响 TCO	±0.03%F.S/10℃	最大激励电压 Excitation,maximum	15V DC
输出温度影响 TC SPAN	±0.03%F.S/10℃	防封等级 Protection class	IP65
输入阻抗 Input impedance	400±20Ω	材质 Construction	合金钢Alloy Steel
输出阻抗 Output impedance	352±3Ω	电缆 Cable	Length:8m
绝缘电阻 Insulation impedance	≥5000MΩ		Diameter: ϕ5mm

ILEG-SS Loadcell

ILEG-SS

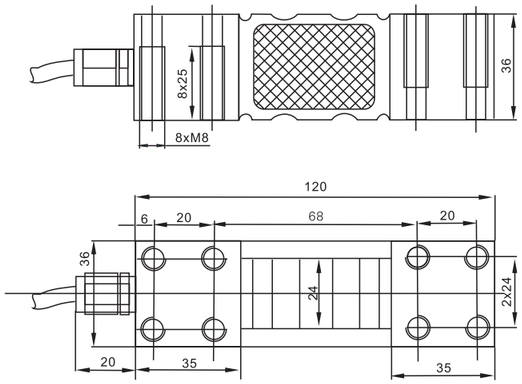

配料秤、包装秤、动态检测系统、台秤
Blending scale, packing scale,dynamic testing system,platform scale

TECHNICAL PARAMETER| 4Wires:Exc+(红,Red);Exc-(黑,Black);Sig+(绿,Green);Sig-(白,White)

额定载荷 Rated capacities(Emax)	30,60,100,150,200,300kg	温度补偿范围 Temperature range, compensated	–10℃~+40℃
灵敏度 Sensitivity	2.0±0.2mV/V	工作温度范围 Temperature range, operating	-30~+70℃
综合误差 Total error	±0.03%F.S	安全过载 Maximum safe overload	150%F.S
蠕变(30分钟)Creep error (30min)	±0.03%F.S	极限过载 Ultimate overload	200%F.S
零点平衡 Zero balance	±1%F.S	推荐激励电压 Excitation,recommend	10~12V DC
零点温度影响 TCO	±0.02%F.S/10℃	最大激励电压 Excitation,maximum	15V DC
输出温度影响 TC SPAN	±0.02%F.S/10℃	防封等级 Protection class	IP65
输入阻抗 Input impedance	400±20Ω	材质 Construction	合金钢Alloy Steel 不锈钢Stainless Steel
输出阻抗 Output impedance	352±3Ω	电缆 Cable	Length:3m
绝缘电阻 Insulation impedance	≥5000MΩ		Diameter: ϕ5mm

ILY-SS Loadcell

ILY-SS

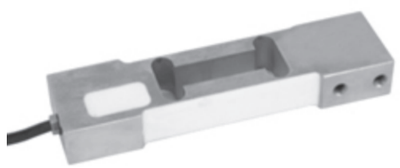

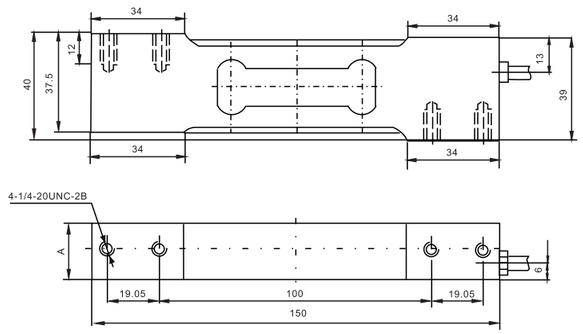

额定载荷(kg) Rated Load	A
8,10,15,20,30,	20
50,100	25.2

配料秤、包装秤、动态检测系统、台秤
Blending scale, packing scale, dynamic testing system,platform scale

TECHNICAL PARAMETER| 4Wires:Exc+(红,Red);Exc-(黑,Black);Sig+(绿,Green);Sig-(白,White)

额定载荷 Rated capacities(Emax)	8,10,15,20,30,50,100kg	温度补偿范围 Temperature range, compensated	–10℃~+40℃
灵敏度 Sensitivity	2.0±0.2mV/V	工作温度范围 Temperature range, operating	-30~+70℃
综合误差 Total error	±0.03%F.S	安全过载 Maximum safe overload	150%F.S
蠕变(30分钟)Creep error (30min)	±0.03%F.S	极限过载 Ultimate overload	200%F.S
零点平衡 Zero balance	±1%F.S	推荐激励电压 Excitation,recommend	10~12V DC
零点温度影响 TCO	±0.02%F.S/10℃	最大激励电压 Excitation,maximum	15V DC
输出温度影响 TC SPAN	±0.02%F.S/10℃	防封等级 Protection class	IP65
输入阻抗 Input impedance	400±20Ω	材质 Construction	不锈钢Stainless Steel
输出阻抗 Output impedance	352±3Ω	电缆 Cable	Length: 3m
绝缘电阻 Insulation impedance	≥5000MΩ		Diameter: ϕ5mm

ILG/-SS Loadcell

ILG/-SS

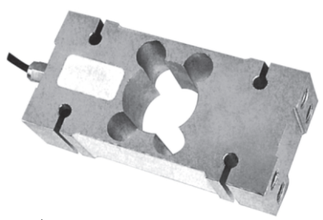

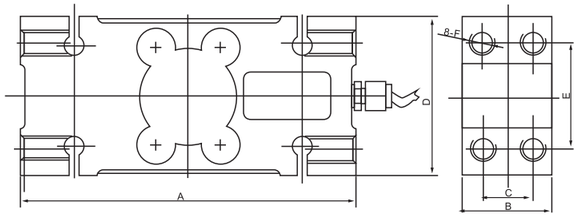

额定载荷(kg) Rated Load	A	B	C	D	E	F
50~200	156	44	24	75	50	M12
250~750	146	60	36	95	70	M12
1000~2000	176	76	46	125	95	M16

电子台秤、配料秤、包装秤、动态检测系统、台秤
Electric platform,blending scale,packing scale,dynamic testing system,platform scale

TECHNICAL PARAMETER| 4Wires:Exc+(红,Red);Exc-(黑,Black);Sig+(绿,Green);Sig-(白,White)

额定载荷 Rated capacities(Emax)	50,100,200,250,500,750,1000,2000kg	温度补偿范围 Temperature range, compensated	–10℃~+40℃
灵敏度 Sensitivity	2.0±0.2mV/V	工作温度范围 Temperature range, operating	-30~+70℃
综合误差 Total error	±0.03%F.S	安全过载 Maximum safe overload	150%F.S
蠕变(30分钟)Creep error (30min)	±0.03%F.S	极限过载 Ultimate overload	200%F.S
零点平衡 Zero balance	±1%F.S	推荐激励电压 Excitation,recommend	10~12V DC
零点温度影响 TCO	±0.02%F.S/10℃	最大激励电压 Excitation,maximum	15V DC
输出温度影响 TC SPAN	±0.02%F.S/10℃	防封等级 Protection class	IP65,IP68(-A,-ASS)
输入阻抗 Input impedance	400±20Ω	材质 Construction	合金钢Alloy Steel 不锈钢Stainless Steel
输出阻抗 Output impedance	352±3Ω	电缆 Cable	Length:3m
绝缘电阻 Insulation impedance	≥5000MΩ		Diameter: ϕ 5mm

XSB Load cell

XSB

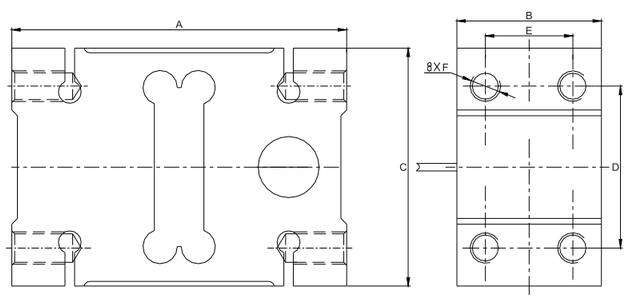

额定载荷(kg) Rated Load	A	B	C	D	E	F
50 ~ 200	156	44	75	50	24	M12
300 ~ 500	146	60	95	70	36	M12
750 ~ 2000	176	76	125	95	46	M16

台秤、各种压式测力装置
Platform scale,all kinds of compression testing devices

TECHNICAL PARAMETER| 4Wires:Exc+(红,Red);Exc-(黑,Black);Sig+(绿,Green);Sig-(白,White)

额定载荷 Rated capacities(Emax)	50,100,200,300,500,750kg;1t,2t;	温度补偿范围 Temperature range, compensated	–10℃~+40℃
灵敏度 Sensitivity	2.0±0.2mV/V	工作温度范围 Temperature range, operating	–20℃~+50℃
精度等级 Accuracy class		安全过载 Maximum safe overload	150%Emax
蠕变(30分钟)Creep error (30min)	±166ppm	极限过载 Ultimate overload	300%Emax
零点平衡 Zero balance	±3%Emax	推荐激励电压 Excitation,recommended	10V DC
零点温度影响 TC ZERO	±17.5ppm/℃	最大激励电压 Excitation,maximum	15V DC
输出温度影响 TC SPAN	+20℃~+40℃,±17.5ppm/℃	防封等级 Protection class	IP65
	–10℃~+20℃,±11.67ppm/℃	材质 Construction	铝合金Aluminium
输入阻抗 Input resistance	404±15Ω	电缆 Cable	3m@ϕ5mm
输出阻抗 Output resistance	350±3Ω	推荐安装力矩 Installation torque,recommended	35N·m
绝缘电阻 Insulation resistance	≥2000MΩ (50V DC)		
推荐安装台面 Max. platform size	50 ~ 200kg 600×600mm 300 ~ 500kg 600×800mm 750 ~2000kg 1200×1200mm		

AMF Load cell

AMF

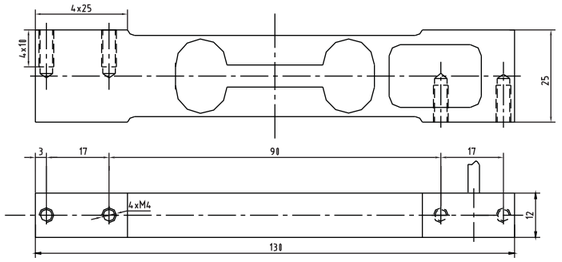

精密电子天平
High precison electronic balance

TECHNICAL PARAMETER| 4Wires:Exc+(红,Red);Exc-(黑,Black);Sig+(绿,Green);Sig-(白,White)

额定载荷 Rated capacities(Emax)	400,600,800,2000g	温度补偿范围 Temperature range, compensated	0℃~+40℃
灵敏度 Sensitivity	1.0±0.2mV/V	工作温度范围 Temperature range, operating	0℃~+50℃
精度等级 Accuracy class	20000d ~ 60000d	安全过载 Maximum safe overload	150%Emax
蠕变(30分钟)Creep error (30min)	±166ppm	极限过载 Ultimate overload	300%Emax
零点平衡 Zero balance	±5%Emax	推荐激励电压 Excitation,recommended	10V DC
零点温度影响 TC ZERO	±28ppm/℃	最大激励电压 Excitation,maximum	15V DC
输出温度影响 TC SPAN	0℃~+40℃,±17.5ppm/℃	防封等级 Protection class	IP65
		材质 Construction	铝合金Aluminium
输入阻抗 Input resistance	404±15Ω	电缆Cable	Length:0.2m
输出阻抗 Output resistance	350±3Ω		Diameter: ϕ 3mm
绝缘电阻 Insulation resistance	≥2000MΩ (50V DC)	推荐安装力矩 Installation torque,recommended	3N·m
推荐安装台面 Max. platform size	200×200mm		

AMG Load cell

AMG

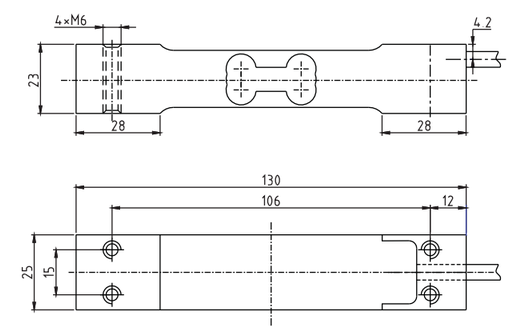

各种案秤、电子天平
All kinds of platform scales, electronic balance

TECHNICAL PARAMETER| 4Wires:Exc+(红,Red);Exc-(黑,Black);Sig+(绿,Green);Sig-(白,White)

额定载荷 Rated capacities(Emax)	2,3,6,8,10,20,35kg	温度补偿范围 Temperature range, compensated	–10℃~+40℃
灵敏度 Sensitivity	1.5±0.2mV/V	工作温度范围 Temperature range, operating	–20℃~+50℃
精度等级 Accuracy class	20000d ~ 50000d	安全过载 Maximum safe overload	150%Emax
蠕变(30分钟)Creep error (30min)	±166ppm	极限过载 Ultimate overload	300%Emax
零点平衡 Zero balance	±3%Emax	推荐激励电压 Excitation,recommended	10V DC
零点温度影响 TC ZERO	±17.5ppm/℃	最大激励电压 Excitation,maximum	15V DC
输出温度影响 TC SPAN	+20℃~+40℃,±17.5ppm/℃	防封等级 Protection class	IP65
	–10℃~+20℃,±11.5ppm/℃	材质 Construction	铝合金Aluminium
输入阻抗 Input resistance	404±15Ω	电缆Cable	Length:0.2m
输出阻抗 Output resistance	350±3Ω		Diameter: ϕ 4mm
绝缘电阻 Insulation resistance	≥2000MΩ (50V DC)	推荐安装力矩 Installation torque,recommended	10N·m
推荐安装台面 Max. platform size	300×300mm		

AMI Load cell

AMI

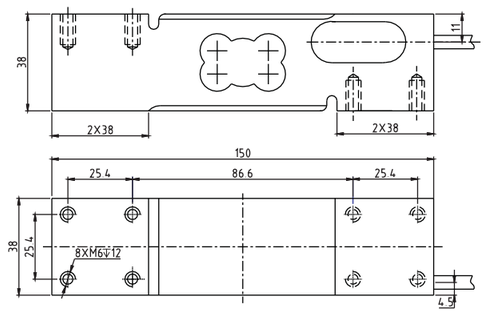

各种台秤
All kinds of platform scales,

TECHNICAL PARAMETER| 4Wires:Exc+(红,Red);Exc-(黑,Black);Sig+(绿,Green);Sig-(白,White)

额定载荷 Rated capacities(Emax)	50,60,100,150,200,250,300,500kg	温度补偿范围 Temperature range, compensated	–10℃~+40℃
灵敏度 Sensitivity	2.0±0.2mV/V	工作温度范围 Temperature range, operating	–20℃~+50℃
精度等级 Accuracy class	OIML C3(approving)	安全过载 Maximum safe overload	150%Emax
蠕变(30分钟)Creep error (30min)	±166ppm	极限过载 Ultimate overload	300%Emax
零点平衡 Zero balance	±3%Emax	推荐激励电压 Excitation,recommended	10V DC
零点温度影响 TC ZERO	±17.5ppm/℃	最大激励电压 Excitation,maximum	15V DC
输出温度影响 TC SPAN	+20℃~+40℃,±17.5ppm/℃	防封等级 Protection class	IP65
	–10℃~+20℃,±11.67ppm/℃	材质 Construction	铝合金Aluminium
输入阻抗 Input resistance	404±15Ω	电缆 Cable	Length:1.8m
输出阻抗 Output resistance	350±3Ω		Diameter: ϕ5mm
绝缘电阻 Insulation resistance	≥2000MΩ (50V DC)	推荐安装力矩 Installation torque,recommended	10N·m
推荐安装台面 Max. platform size	400×400mm		

AMI Load cell

AMI

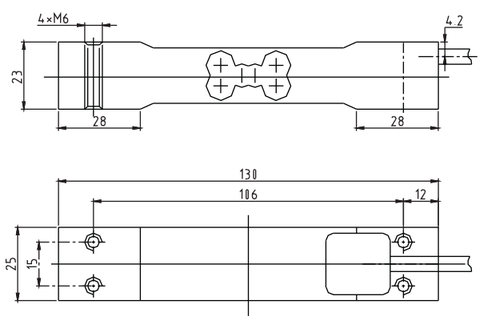

各种 案秤
All kinds of platform scales,

TECHNICAL PARAMETER| 4Wires:Exc+(红,Red);Exc-(黑,Black);Sig+(绿,Green);Sig-(白,White)

额定载荷 Rated capacities(Emax)	5,6,8,10,15,20,30,35,40kg	温度补偿范围 Temperature range, compensated	–10℃~+40℃
灵敏度 Sensitivity	2.0±0.2mV/V	工作温度范围 Temperature range, operating	–20℃~+50℃
精度等级 Accuracy class	OIML C3	安全过载 Maximum safe overload	150%Emax
蠕变(30分钟)Creep error (30min)	±166ppm	极限过载 Ultimate overload	300%Emax
零点平衡 Zero balance	±3%Emax	推荐激励电压 Excitation,recommended	10V DC
零点温度影响 TC ZERO	±17.5ppm/℃	最大激励电压 Excitation,maximum	15V DC
输出温度影响 TC SPAN	+20℃~+40℃,±17.5ppm/℃	防封等级 Protection class	IP65
	–10℃~+20℃,±11.67ppm/℃	材质 Construction	铝合金Aluminium
输入阻抗 Input resistance	404±15Ω	电缆 Cable	Length: 0.5m
输出阻抗 Output resistance	350±3Ω		Diameter: ϕ5mm
绝缘电阻 Insulation resistance	≥2000MΩ (50V DC)	推荐安装力矩 Installation torque,recommended	10N·m
推荐安装台面 Max. platform size	300×300mm		

AMIB Load cell

AMIB

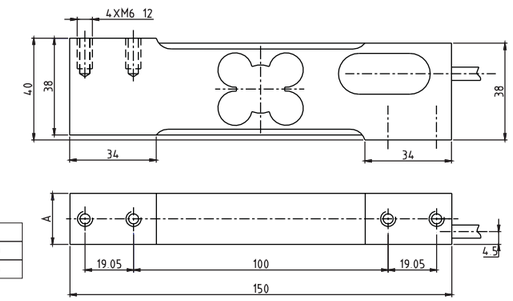

量程(Kg)	A
8～30	20
50～200	25

各种台秤、案秤
All kinds of platform scales,bench scale

TECHNICAL PARAMETER| 4Wires:Exc+(红,Red);Exc-(黑,Black);Sig+(绿,Green);Sig-(白,White)

额定载荷 Rated capacities(Emax)	8,10,15,20,30,50,60,75,100,200kg	温度补偿范围 Temperature range, compensated	–10℃~+40℃
灵敏度 Sensitivity	2.0±0.2mV/V	工作温度范围 Temperature range, operating	–20℃~+50℃
精度等级 Accuracy class	OIML C3	安全过载 Maximum safe overload	150%Emax
蠕变(30分钟)Creep error (30min)	±166ppm	极限过载 Ultimate overload	300%Emax
零点平衡 Zero balance	±3%Emax	推荐激励电压 Excitation,recommended	10V DC
零点温度影响 TC ZERO	±17.5ppm/℃	最大激励电压 Excitation,maximum	15V DC
输出温度影响 TC SPAN	+20℃~+40℃,±17.5ppm/℃	防封等级 Protection class	IP65
	–10℃~+20℃,±11.67ppm/℃	材质 Construction	铝合金Aluminium
输入阻抗 Input resistance	404±15Ω	电缆Cable	Length:1.8m
输出阻抗 Output resistance	350±3Ω		Diameter: ϕ5mm
绝缘电阻 Insulation resistance	≥2000MΩ (50V DC)	推荐安装力矩 Installation torque,recommended	10N·m
推荐安装台面 Max. platform size	300×400mm		

AMIBK Load cell

AMIBK

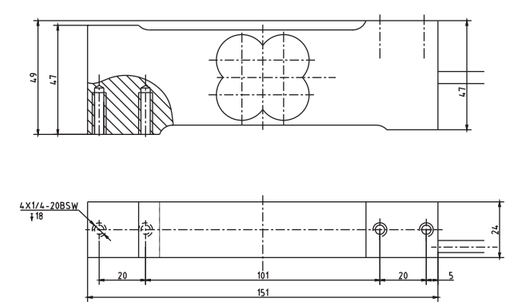

各种台秤、案秤
All kinds of platform scales,bench scale

TECHNICAL PARAMETER| 4Wires:Exc+(红,Red);Exc-(黑,Black);Sig+(绿,Green);Sig-(白,White)

额定载荷 Rated load	5,10,20,30,50kg	绝缘电阻 Insulation resistance	≥2000MΩ(50V DC)
灵敏度 Sensitivity	2.0±0.2mV/V	工作温度范围 Operating Temp Range	–20~+50℃
精度等级 Accuracy class	OIML C3	安全过载 Safe load limit	150%F.S
蠕变（30分钟）Creep(30min)	±166ppm	极限过载 Lateral load limit	300%F.S
零点平衡 Zero balance	±3%Emax	推荐激励电压 Recommend excitation	10V DC
零点温度影响 TCO	±17.5ppm℃	最大激励电压 Maximum excitation	15V DC
输出温度影响 TC SPAN	+20℃~+40℃, ±17.5ppm/℃	密封等级Protection Class	IP65
	–10℃~+20℃, ±11.67ppm/℃	材质Construction	铝合金 Aluminium
输入阻抗 Input resistance	404±15Ω	电缆Cable	Length:0.45m
输出阻抗 Output resistance	350±3Ω		Diameter: ϕ5mm
推荐安装平台 Max.piatform size	300×400mm	推荐安装力矩 Installation torquere,commended	10N·m

AMIE Load cell

AMIE

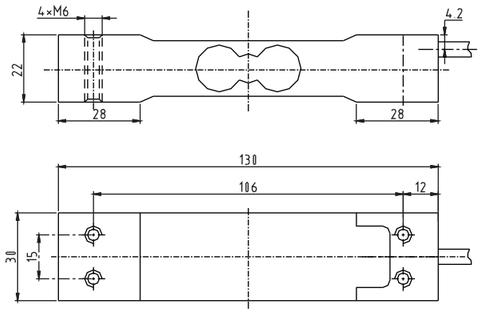

各种台秤、案秤
All kinds of platform scales,bench scale

TECHNICAL PARAMETER| 4Wires:Exc+(红,Red);Exc-(黑,Black);Sig+(绿,Green);Sig-(白,White)

额定载荷 Rated capacities(Emax)	6,10,20,30kg	温度补偿范围 Temperature range, compensated	–10℃~+40℃
灵敏度 Sensitivity	2.0±0.2mV/V	工作温度范围 Temperature range, operating	–20℃~+50℃
精度等级 Accuracy class		安全过载 Maximum safe overload	150%Emax
蠕变(30分钟)Creep error (30min)	±166ppm	极限过载 Ultimate overload	300%Emax
零点平衡 Zero balance	±3%Emax	推荐激励电压 Excitation,recommended	10V DC
零点温度影响 TC ZERO	±17.5ppm/℃	最大激励电压 Excitation,maximum	15V DC
输出温度影响 TC SPAN	+20℃~+40℃,±17.5ppm/℃	防封等级 Protection class	IP65
	–10℃~+20℃,±11.67ppm/℃	材质 Construction	铝合金Aluminium
输入阻抗 Input resistance	404±15Ω	电缆Cable	Length:1m
输出阻抗 Output resistance	350±3Ω		Diameter: ϕ5mm
绝缘电阻 Insulation resistance	≥2000MΩ (50V DC)	推荐安装力矩 Installation torque,recommended	10N·m
推荐安装台面 Max. platform size	300×300mm		

AMIF Load cell

AMIF

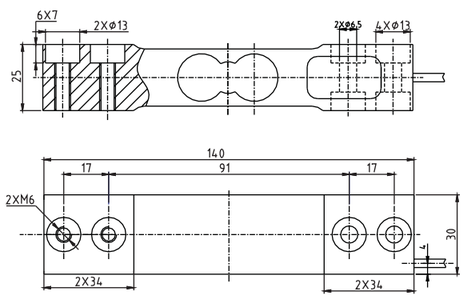

各种台秤、案秤
All kinds of platform scales,bench scale

TECHNICAL PARAMETER| 4Wires:Exc+(红,Red);Exc-(黑,Black);Sig+(绿,Green);Sig-(白,White)

额定载荷 Rated capacities(Emax)	15,30kg	温度补偿范围 Temperature range, compensated	–10℃~+40℃
灵敏度 Sensitivity	1.0±0.1mV/V	工作温度范围 Temperature range, operating	–20℃~+50℃
精度等级 Accuracy class		安全过载 Maximum safe overload	150%Emax
蠕变(30分钟)Creep error (30min)	±166ppm	极限过载 Ultimate overload	300%Emax
零点平衡 Zero balance	±3%Emax	推荐激励电压 Excitation,recommended	10V DC
零点温度影响 TC ZERO	±17.5ppm/℃	最大激励电压 Excitation,maximum	15V DC
输出温度影响 TC SPAN	+20℃~+40℃,±17.5ppm/℃	防封等级 Protection class	IP65
	–10℃~+20℃,±11.67ppm/℃	材质 Construction	铝合金Aluminium
输入阻抗 Input resistance	404±15Ω	电缆Cable	Length:0.3m
输出阻抗 Output resistance	350±3Ω		Diameter: ϕ3mm
绝缘电阻 Insulation resistance	≥2000MΩ (50V DC)	推荐安装力矩 Installation torque,recommended	10N·m
推荐安装台面 Max. platform size	300×300mm		

AMIQ Load cell

AMIQ

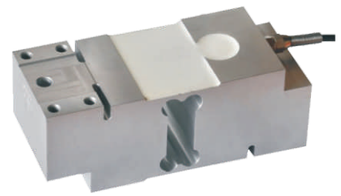

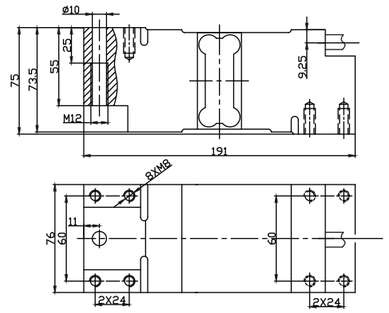

台秤、各种压式测力装置
Platform scale,all kinds of compression testing devices

TECHNICAL PARAMETER| 4Wires:Exc+(红,Red);Exc-(黑,Black);Sig+(绿,Green);Sig-(白,White)

额定载荷 Rated capacities(Emax)	50,75,100,150,200,250,300,500,635kg;1t	温度补偿范围 Temperature range, compensated	–10℃~+40℃
灵敏度 Sensitivity	2.0±0.2mV/V	工作温度范围 Temperature range, operating	–20℃~+50℃
精度等级 Accuracy class		安全过载 Maximum safe overload	150%Emax
蠕变(30分钟)Creep error (30min)	±166ppm	极限过载 Ultimate overload	300%Emax
零点平衡 Zero balance	±3%Emax	推荐激励电压 Excitation,recommended	10V DC
零点温度影响 TC ZERO	±17.5ppm/℃	最大激励电压 Excitation,maximum	15V DC
输出温度影响 TC SPAN	+20℃~+40℃,±17.5ppm/℃	防封等级 Protection class	IP65
	–10℃~+20℃,±11.67ppm/℃	材质 Construction	铝合金Aluminium
输入阻抗 Input resistance	404±15Ω	电缆Cable	Length:6m
输出阻抗 Output resistance	350±3Ω		Diameter: ϕ5mm
绝缘电阻 Insulation resistance	≥2000MΩ (50V DC)	推荐安装力矩 Installation torque,recommended	25N·m
推荐安装台面 Max. platform size	600×800mm		

AMW Load cell

AMW

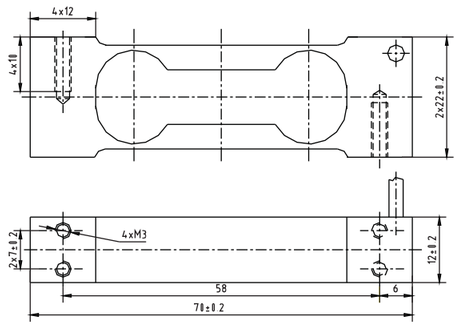

精密电子天平
High precison electronic balance

TECHNICAL PARAMETER| 4Wires:Exc+(红,Red);Exc-(黑,Black);Sig+(绿,Green);Sig-(白,White)

额定载荷 Rated capacities(Emax)	500g	温度补偿范围 Temperature range, compensated	0℃~+40℃
灵敏度 Sensitivity	1.0±0.2mV/V	工作温度范围 Temperature range, operating	0℃~+50℃
精度等级 Accuracy class	20000d ~ 30000d	安全过载 Maximum safe overload	150%Emax
蠕变(30分钟)Creep error (30min)	±166ppm	极限过载 Ultimate overload	300%Emax
零点平衡 Zero balance	±3%Emax	推荐激励电压 Excitation,recommended	10V DC
零点温度影响 TC ZERO	±28ppm/℃	最大激励电压 Excitation,maximum	15V DC
输出温度影响 TC SPAN	0℃~+40℃,±17.5ppm/℃	防封等级 Protection class	IP65
		材质 Construction	铝合金Aluminium
输入阻抗 Input resistance	404±15Ω	电缆Cable	Length:0.2m
输出阻抗 Output resistance	350±3Ω		Diameter: ϕ3mm
绝缘电阻 Insulation resistance	≥2000MΩ (50V DC)	推荐安装力矩 Installation torque,recommended	3N·m
推荐安装台面 Max. platform size	200×200mm		

UDA Load cell

UDA

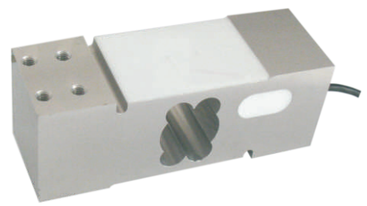

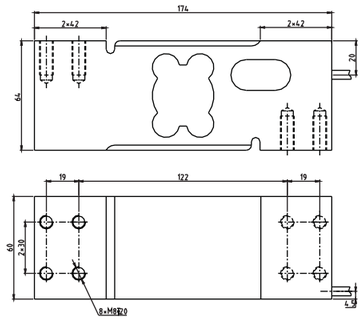

台秤、各种压式测力装置
Platform scale,all kinds of compression testing devices

TECHNICAL PARAMETER| 4Wires:Exc+(红,Red);Exc-(黑,Black);Sig+(绿,Green);Sig-(白,White)

额定载荷 Rated capacities(Emax)	50,60,75,100,150,200,250,300,350,500,600,635,750,800kg;1t	温度补偿范围 Temperature range, compensated	–10℃~+40℃
灵敏度 Sensitivity	2.0±0.2mV/V	工作温度范围 Temperature range, operating	–20℃~+50℃
精度等级 Accuracy class	OIML C3	安全过载 Maximum safe overload	150%Emax
蠕变(30分钟)Creep error (30min)	±166ppm	极限过载 Ultimate overload	300%Emax
零点平衡 Zero balance	±3%Emax	推荐激励电压 Excitation,recommended	10V DC
零点温度影响 TC ZERO	±17.5ppm/℃	最大激励电压 Excitation,maximum	15V DC
输出温度影响 TC SPAN	+20℃~+40℃,±17.5ppm/℃	防封等级 Protection class	IP65
	–10℃~+20℃,±11.67ppm/℃	材质 Construction	铝合金Aluminium
输入阻抗 Input resistance	404±15Ω	电缆Cable	Length:1.8m
输出阻抗 Output resistance	350±3Ω		Diameter: ϕ5mm
绝缘电阻 Insulation resistance	≥2000MΩ (50V DC)	推荐安装力矩 Installation torque,recommended	25N·m
推荐安装台面 Max. platform size	600×600mm		

UDAB Load cell

UDAB

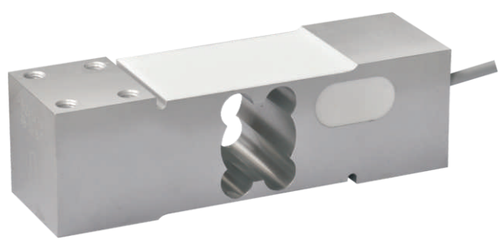

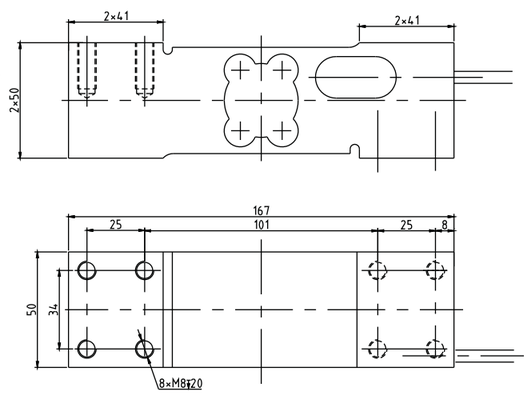

台秤、各种压式测力装置
Platform scale,all kinds of compression testing devices

TECHNICAL PARAMETER| 4Wires:Exc+(红,Red);Exc-(黑,Black);Sig+(绿,Green);Sig-(白,White)

额定载荷 Rated load	50,100,200,300,400kg	绝缘电阻 Insulation resistance	≥2000MΩ(50V DC)
灵敏度 Sensitivity	2.0±0.2mV/V	工作温度范围 Operating Temp Range	–20~+50℃
精度等级 Accuracy class		安全过载 Safe load limit	150%F.S
蠕变（30分钟）Creep(30min)	±166ppm	极限过载 Lateral load limit	300%F.S
零点平衡 Zero balance	±3%Emax	推荐激励电压 Recommend excitation	10V DC
零点温度影响 TCO	±17.5ppm℃	最大激励电压 Maximum excitation	15V DC
输出温度影响 TC SPAN	+20℃~+40℃,±17.5ppm/℃	密封等级Protection Class	IP65
	–10℃~+20℃,±11.67ppm/℃	材质Construction	铝合金 Aluminium
输入阻抗 Input resistance	404±15Ω	电缆Cable	Length:3m
输出阻抗 Output resistance	350±3Ω		Diameter: ϕ5mm
推荐安装平台 Max.piatform size	500×500mm	推荐安装力矩 Installation torquere,commended	25N·m

UDAE Load cell

UDAE

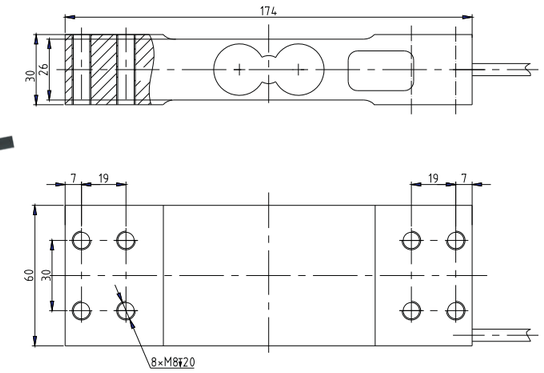

台秤、各种压式测力装置
Platform scale,all kinds of compression testing devices

TECHNICAL PARAMETER| 4Wires:Exc+(红,Red);Exc-(黑,Black);Sig+(绿,Green);Sig-(白,White)

额定载荷 Rated load	300kg	绝缘电阻 Insulation resistance	≥2000MΩ(50V DC)
灵敏度 Sensitivity	2.0±0.2mV/V	工作温度范围 Operating Temp Range	–20~+50℃
精度等级 Accuracy class		安全过载 Safe load limit	150%F.S
蠕变（30分钟）Creep(30min)	±166ppm	极限过载 Lateral load limit	300%F.S
零点平衡 Zero balance	±3%Emax	推荐激励电压 Recommend excitation	10V DC
零点温度影响 TCO	±17.5ppm℃	最大激励电压 Maximum excitation	15V DC
输出温度影响 TC SPAN	+20℃~+40℃,±17.5ppm/℃	密封等级Protection Class	IP65
	–10℃~+20℃,±11.67ppm/℃	材质Construction	铝合金 Aluminium
输入阻抗 Input resistance	404±15Ω	电缆Cable	Length:1.8m
输出阻抗 Output resistance	350±3Ω		Diameter: ϕ5mm
推荐安装平台 Max.piatform size	500×500mm	推荐安装力矩 Installation torquere,commended	25N·m

UDB Load cell

UDB

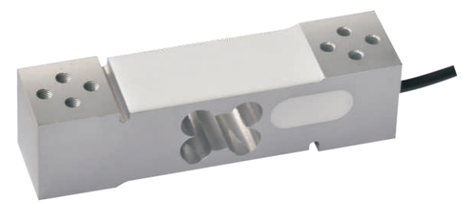

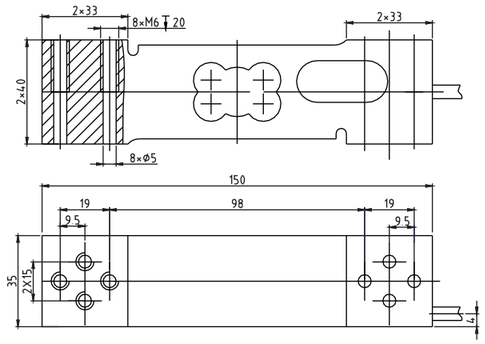

台秤、各种压式测力装置
Platform scale,all kinds of compression testing devices

TECHNICAL PARAMETER| 4Wires:Exc+(红,Red);Exc-(黑,Black);Sig+(绿,Green);Sig-(白,White)

额定载荷 Rated capacities(Emax)	15,20,30,35,50,60,100,150,200,300,500kg	温度补偿范围 Temperature range, compensated	–10℃~+40℃
灵敏度 Sensitivity	2.0±0.2mV/V	工作温度范围 Temperature range, operating	–20℃~+50℃
精度等级 Accuracy class	OIML C3	安全过载 Maximum safe overload	150%Emax
蠕变(30分钟)Creep error (30min)	±166ppm	极限过载 Ultimate overload	300%Emax
零点平衡 Zero balance	±3%Emax	推荐激励电压 Excitation,recommended	10V DC
零点温度影响 TC ZERO	±17.5ppm/℃	最大激励电压 Excitation,maximum	15V DC
输出温度影响 TC SPAN	+20℃~+40℃,±17.5ppm/℃	防封等级 Protection class	IP65
	–10℃~+20℃,±11.67ppm/℃	材质 Construction	铝合金Aluminium
输入阻抗 Input resistance	404±15Ω	电缆Cable	Length:1.8m
输出阻抗 Output resistance	350±3Ω		Diameter: ϕ5mm
绝缘电阻 Insulation resistance	≥2000MΩ (50V DC)	推荐安装力矩 Installation torque,recommended	10N·m
推荐安装台面 Max. platform size	400×400mm		

UDJ Load cell

UDJ

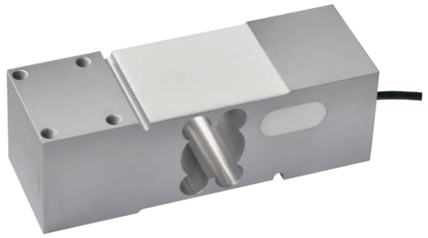

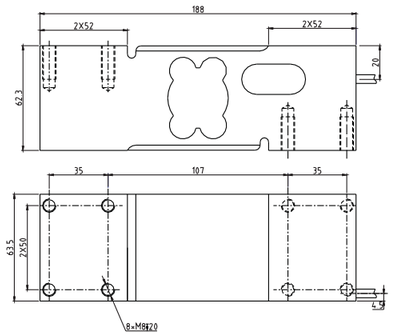

台秤、各种压式测力场合
Platform scale,compression testing situations

TECHNICAL PARAMETER| 4Wires:Exc+(红,Red);Exc-(黑,Black);Sig+(绿,Green);Sig-(白,White)

额定载荷 Rated capacities(Emax)	50,75,100,150,200,250,300,500,635,750,800kg;1t	温度补偿范围 Temperature range, compensated	–10℃~+40℃
灵敏度 Sensitivity	2.0±0.2mV/V	工作温度范围 Temperature range, operating	–20℃~+50℃
精度等级 Accuracy class	OIML C3	安全过载 Maximum safe overload	150%Emax
蠕变(30分钟)Creep error (30min)	±166ppm	极限过载 Ultimate overload	300%Emax
零点平衡 Zero balance	±3%Emax	推荐激励电压 Excitation,recommended	10V DC
零点温度影响 TC ZERO	±17.5ppm/℃	最大激励电压 Excitation,maximum	15V DC
输出温度影响 TC SPAN	+20℃~+40℃,±17.5ppm/℃	防封等级 Protection class	IP65
	–10℃~+20℃,±11.67ppm/℃	材质 Construction	铝合金Aluminium
输入阻抗 Input resistance	404±15Ω	电缆Cable	Length:1.8m
输出阻抗 Output resistance	350±3Ω		Diameter: ϕ 5mm
绝缘电阻 Insulation resistance	≥2000MΩ (50V DC)	推荐安装力矩 Installation torque,recommended	25N·m
推荐安装台面 Max. platform size	600×800mm		

UDN Load cell

UDN

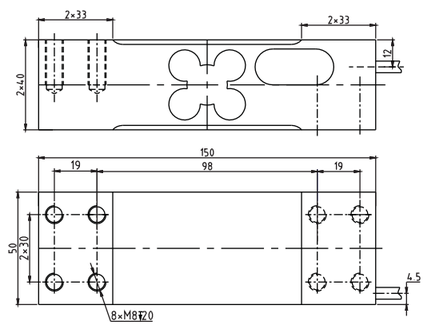

台秤、各种压式测力装置
Platform scale,all kinds of compression testing devices

TECHNICAL PARAMETER| 4Wires:Exc+(红,Red);Exc-(绿,Green);Sig+(黑,Black);Sig-(白,White)

额定载荷 Rated capacities(Emax)	60,100,150,200,250,300,400,500kg	温度补偿范围 Temperature range, compensated	–10℃~+40℃
灵敏度 Sensitivity	2.0±0.2mV/V	工作温度范围 Temperature range, operating	–20℃~+50℃
精度等级 Accuracy class	OIML C4	安全过载 Maximum safe overload	150%Emax
蠕变(30分钟)Creep error (30min)	±125ppm	极限过载 Ultimate overload	300%Emax
零点平衡 Zero balance	±3%Emax	推荐激励电压 Excitation,recommended	10V DC
零点温度影响 TC ZERO	±17.5ppm/℃	最大激励电压 Excitation,maximum	15V DC
输出温度影响 TC SPAN	+20℃~+40℃,±14ppm/℃	防封等级 Protection class	IP65
	–10℃~+20℃,±9ppm/℃	材质 Construction	铝合金Aluminium
输入阻抗 Input resistance	404±15Ω	电缆Cable	Length:1.8m
输出阻抗 Output resistance	350±3Ω		Diameter: ϕ 5mm
绝缘电阻 Insulation resistance	≥2000MΩ (50V DC)	推荐安装力矩 Installation torque,recommended	25N·m
推荐安装台面 Max. platform size	500×500mm		

UDQ Load cell

UDQ

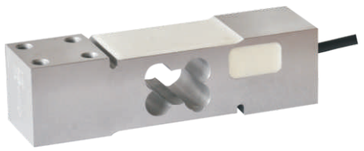

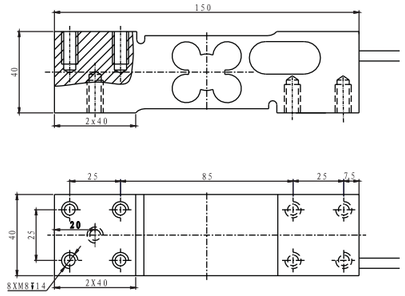

配料秤、包装秤、动态检测系统、台秤
Blending scale,packing scale,dynamic testing system,platform scale

TECHNICAL PARAMETER| 4Wires:Exc+(红,Red);Exc-(黑,Black);Sig+(绿,Green);Sig-(白,White)

额定载荷 Rated capacities(Emax)	50,75,100,120,150,200,250,300kg;	温度补偿范围 Temperature range, compensated	–10℃~+40℃
灵敏度 Sensitivity	2.0±0.2mV/V	工作温度范围 Temperature range, operating	–20℃~+50℃
精度等级 Accuracy class		安全过载 Maximum safe overload	150%Emax
蠕变(30分钟)Creep error (30min)	±166ppm	极限过载 Ultimate overload	300%Emax
零点平衡 Zero balance	±3%Emax	推荐激励电压 Excitation,recommended	10V DC
零点温度影响 TC ZERO	±17.5ppm/℃	最大激励电压 Excitation,maximum	15V DC
输出温度影响 TC SPAN	+20℃~+40℃,±17.5ppm/℃	防封等级 Protection class	IP65
	–10℃~+20℃,±11.67ppm/℃	材质 Construction	铝合金Aluminium
输入阻抗 Input resistance	404±15Ω	电缆Cable	Length:3m
输出阻抗 Output resistance	350±3Ω		Diameter: ϕ 5mm
绝缘电阻 Insulation resistance	≥2000MΩ (50V DC)	推荐安装力矩 Installation torque,recommended	25N·m
推荐安装台面 Max. platform size	400×400mm		

UDQC Load cell

UDQC

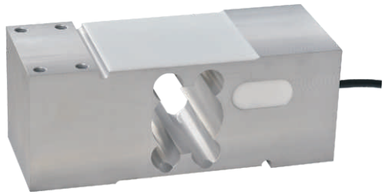

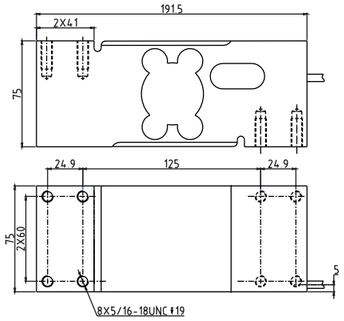

配料秤、包装秤、动态检测系统、台秤
Blending scale,packing scale,dynamic testing system,platform scale

TECHNICAL PARAMETER| 4Wires:Exc+(红,Red);Exc-(黑,Black);Sig+(绿,Green);Sig-(白,White)

额定载荷 Rated capacities(Emax)	50,100,200,300,500,600,635,1000kg; 100,250,500,750,1000,2000lb;	温度补偿范围 Temperature range, compensated	–10℃~+40℃
灵敏度 Sensitivity	2.0±0.2mV/V	工作温度范围 Temperature range, operating	–20℃~+50℃
精度等级 Accuracy class		安全过载 Maximum safe overload	150%Emax
蠕变(30分钟)Creep error (30min)	±166ppm	极限过载 Ultimate overload	300%Emax
零点平衡 Zero balance	±3%Emax	推荐激励电压 Excitation,recommended	10V DC
零点温度影响 TC ZERO	±17.5ppm/℃	最大激励电压 Excitation,maximum	15V DC
输出温度影响 TC SPAN	+20℃~+40℃,±17.5ppm/℃	防封等级 Protection class	IP65
	–10℃~+20℃,±11.67ppm/℃	材质 Construction	铝合金Aluminium
输入阻抗 Input resistance	404±15Ω	电缆Cable	Length:3m
输出阻抗 Output resistance	350±3Ω		Diameter: ϕ 5mm
绝缘电阻 Insulation resistance	≥2000MΩ (50V DC)	推荐安装力矩 Installation torque,recommended	25N·m
推荐安装台面 Max. platform size	600×800mm		

UHE Load cell

UHE

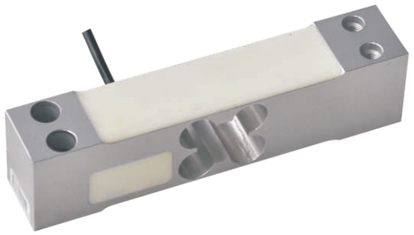

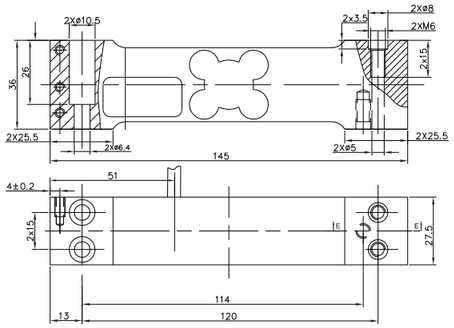

各种台秤
All kinds of platform scales,

TECHNICAL PARAMETER| 4Wires:Exc+(红,Red);Exc-(黑,Black);Sig+(绿,Green);Sig-(白,White)

额定载荷 Rated load	12,18,36,60kg	绝缘电阻 Insulation resistance	≥2000MΩ(50V DC)
灵敏度 Sensitivity	2.0±0.2mV/V	工作温度范围 Operating Temp Range	–20~+50℃
精度等级 Accuracy class	OIML C3	安全过载 Safe load limit	150%F.S
蠕变（30分钟）Creep(30min)	±166ppm	极限过载 Lateral load limit	300%F.S
零点平衡 Zero balance	±3%Emax	推荐激励电压 Recommend excitation	10V DC
零点温度影响 TCO	±17.5ppm℃	最大激励电压 Maximum excitation	15V DC
输出温度影响 TC SPAN	+20℃~+40℃, ±17.5ppm/℃	密封等级Protection Class	IP65
	–10℃~+20℃, ±11.67ppm/℃	材质Construction	铝合金 Aluminium
输入阻抗 Input resistance	404±15Ω	电缆Cable	Length:0.5m
输出阻抗 Output resistance	350±3Ω		Diameter: ϕ4mm
推荐安装平台 Max.piatform size	300×400mm	推荐安装力矩 Installation torquere,commended	10N・m

PB Load cell

PB

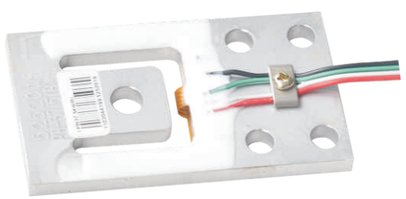

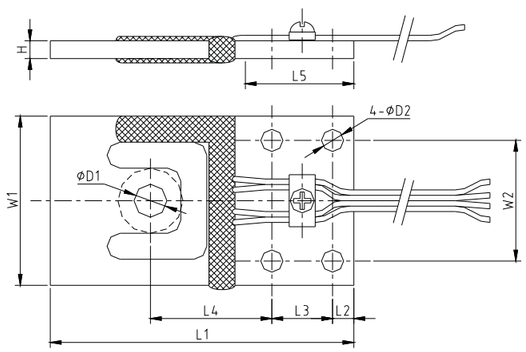

量程(t)	L1	L2	L3	L4	L5	W1	W2	H	? D1	? D2
3.75	70	4.9	14	28	23.7	39	27.8	2	5.1	5.1
7.5								2.5		
15								4.1	7.6	6.6
37.5	76.2	6	15	29.3	27	44.5	30	4.8		
75	84.4	6.4		34	27.7	54.8		6.4		
150	107.3	7.8	22.9	45.9	38.4	69.9	44.5	7.9	9.1	8.1
375	119.4	9.1	25.4	52.6	43.7	76.1	50.8	12.7		9.8

电梯、小平台秤、人体秤；
Elevator small platform scales, healthy scales

TECHNICAL PARAMETER| 4Wires:Exc+(红,Red);Exc-(黑,Black);Sig+(绿,Green);Sig-(白,White)

额定载荷 Rated load	3.75,7.5,15,37.5,75,150,375kg	绝缘电阻 Insulation resistance	≥2000MΩ(50V DC)
灵敏度 Sensitivity	1.0±0.2mV/V	工作温度范围 Operating Temp Range	–20~+50℃
精度等级 Accuracy class		安全过载 Safe load limit	150%F.S
蠕变（30分钟）Creep(30min)	±166ppm	极限过载 Lateral load limit	300%F.S
零点平衡 Zero balance	±3%Emax	推荐激励电压 Recommend excitation	10V DC
零点温度影响 TCO	±17.5ppm℃	最大激励电压 Maximum excitation	15V DC
输出温度影响 TC SPAN	+20℃~+40℃, ±17.5ppm/℃	密封等级Protection Class	IP65
	–10℃~+20℃, ±11.67ppm/℃	材质Construction	铝合金 Aluminium
输入阻抗 Input resistance	1220±15Ω	电缆Cable	Length:0.5m
输出阻抗 Output resistance	1000±5Ω		Diameter:(排线flat cable)
推荐安装平台 Max.piatform size		推荐安装力矩 Installation torquere,commended	10N・m

BHSC–A Loadcell

BHSC–A

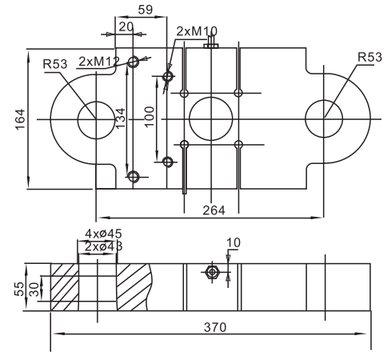

吊钩秤、料斗秤、包装秤、过载限位
Crane scale, hopper scale,packing scale,over load limit

TECHNICAL PARAMETER| 4Wires:Exc+(红,Red);Exc-(黑,Black);Sig+(绿,Green);Sig-(白,White)

额定载荷 Rated capacities(Emax)	30t	温度补偿范围 Temperature range, compensated	–10℃~+40℃
灵敏度 Sensitivity	2.0±0.002mV/V	工作温度范围 Temperature range, operating	-30~+70℃
综合误差 Total error	±0.05%F.S	安全过载 Maximum safe overload	120%F.S
蠕变(30分钟)Creep error (30min)	±0.03%F.S	极限过载 Ultimate overload	200%F.S
零点平衡 Zero balance	±1%F.S	推荐激励电压 Excitation,recommend	10~12V DC
零点温度影响 TCO	±0.02%F.S/10℃	最大激励电压 Excitation,maximum	15V DC
输出温度影响 TC SPAN	±0.02%F.S/10℃	防封等级 Protection class	IP68
输入阻抗 Input impedance	400±20Ω	材质 Construction	合金钢Alloy Steel
输出阻抗 Output impedance	350±5Ω	电缆 Cable	Length:1m
绝缘电阻 Insulation impedance	≥5000MΩ		Diameter: ϕ5mm

NHS–A/–ASS Loadcell

NHS–A/–ASS

1~4.7t

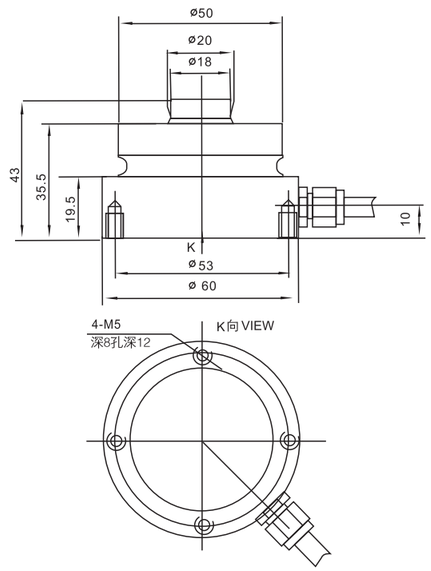

轴重秤、料斗秤、仓储秤、罐体秤
Axle–load scale,hopper scale,warehouse scale, silo scale

轴重秤、料斗秤、仓储秤、罐体秤
Axle wheel scale,hopper scale, Silo scale

NHS 100t

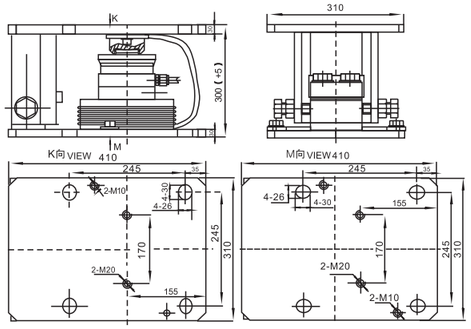

NHS 150t

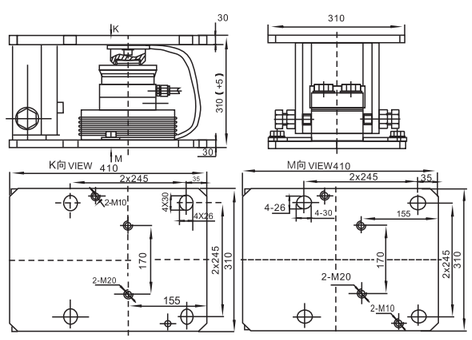

NHS 10~22t模块 Module

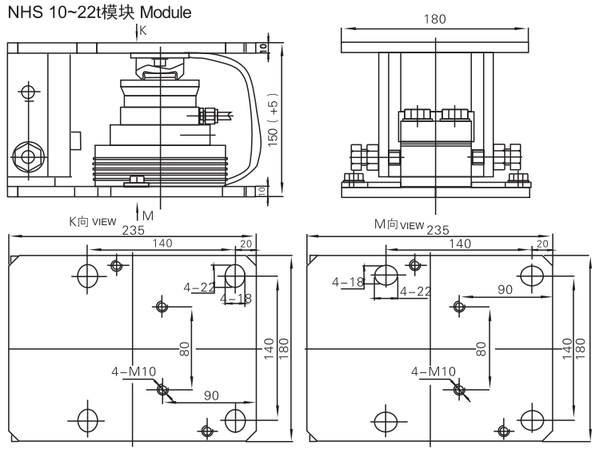

NHS 33t模块 Module

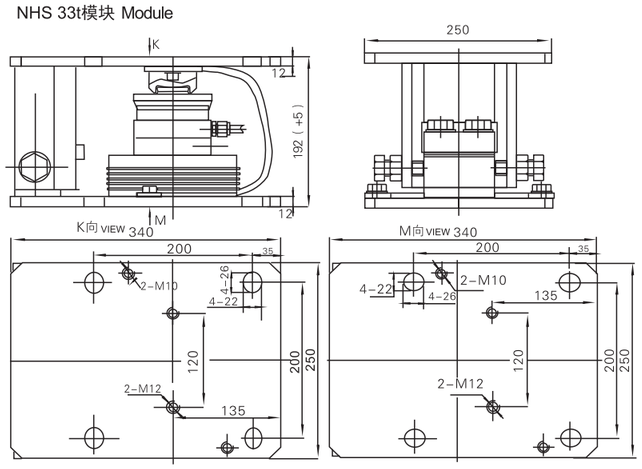

NHS 47~68t模块 Module

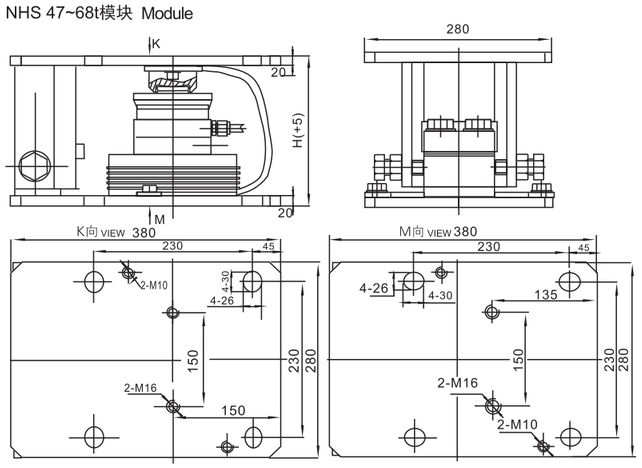

额定载荷(t) Rated Load	H
47	230
68	240

10~150t

额定载荷(t) Rated Load	A	B	C	H	J	K
10~22	75	30	75	50	7	6.5
33	95	40	95	65	7	10
47	130	60	130	75	7	14
68	130	60	130	85	7	14
100	150	70	150	90	7	16
150	150	70	150	100	7	16

10~150t

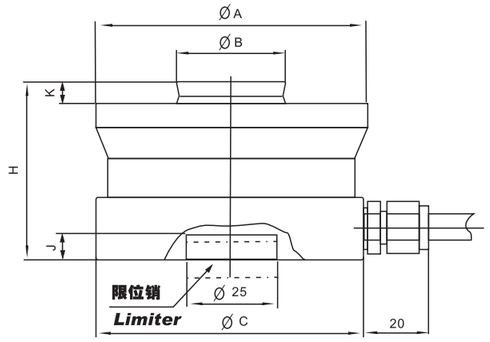

1~4.7t

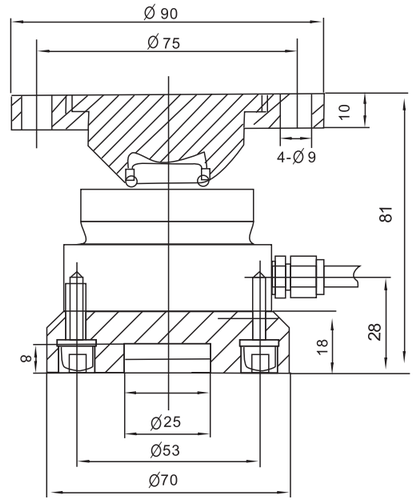

10~100t

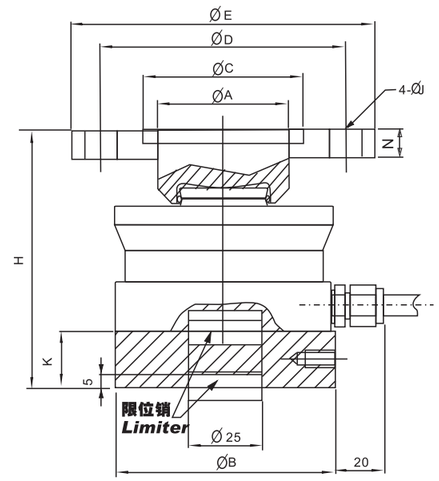

10~100t

额定载荷(t) Rated Load	A	B	C	D	E	H	K	J	N
10~22	45	75	55	80	100	95	20	11.5	10
33	58	95	68	95	120	120	25	13	12
47	80	130	92	130	170	140	30	17.5	20
68	80	130	92	130	170	150	30	17.5	20
100	100	150	110	150	200	177	40	25	22
150	100	150	110	150	200	187	40	25	22

限位销的厚度为10mm,建议客户装底板孔深6mm
Thickness of the limited pin is 10mm,recommended depth for the installation base plate is 6mm

TECHNICAL PARAMETER| 4Wires:Exc+(红,Red);Exc-(黑,Black);Sig+(绿,Green);Sig-(白,White)

额定载荷 Rated capacities(Emax)	1,2.2,3.3,4.7,10,15,22,33,47,68,100,150t	温度补偿范围 Temperature range, compensated	-10℃~+40℃
灵敏度 Sensitivity	2.85±0.015mV/V	工作温度范围 Temperature range, operating	-30~+70℃
综合误差 Total error	±0.03,±0.05,±0.1%F.S	安全过载 Maximum safe overload	150%F.S
蠕变(30分钟)Creep error (30min)	±0.03%F.S	极限过载 Ultimate overload	200%F.S
零点平衡 Zero balance	±1%F.S	推荐激励电压 Excitation,recommend	10~12V DC
零点温度影响 TCO	±0.03%F.S/10℃	最大激励电压 Excitation,maximum	15V DC
输出温度影响 TC SPAN	±0.03%F.S/10℃	防封等级 Protection class	IP68
输入阻抗 Input impedance	1450±10Ω	材质 Construction	合金钢Alloy Steel 不锈钢Stainless Steel
输出阻抗 Output impedance	1402±5Ω(L≥15m)	电缆 Cable	Length=L:8m(1~4.7t),12m(10~33t),16m(47~150t)
绝缘电阻 Insulation impedance	≥5000MΩ		Diameter: φ6mm

LFSG Loadcell

LFSG

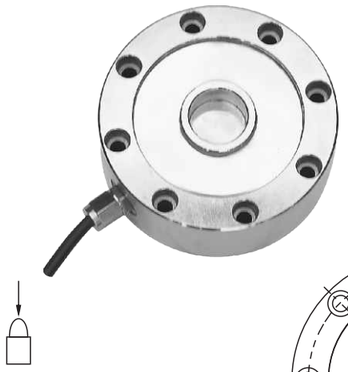

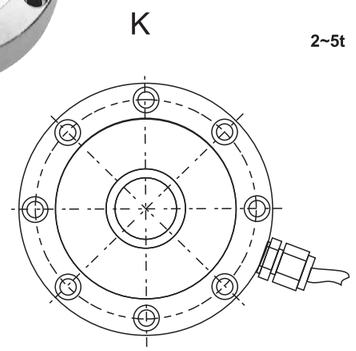

2~5t

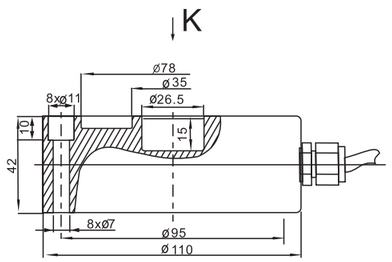

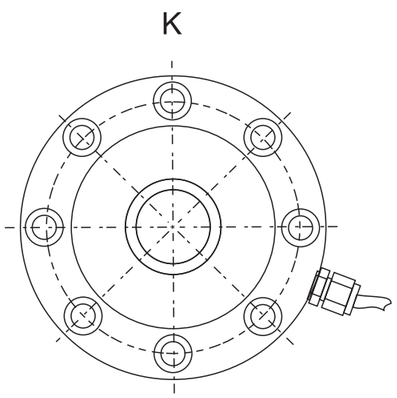

10t

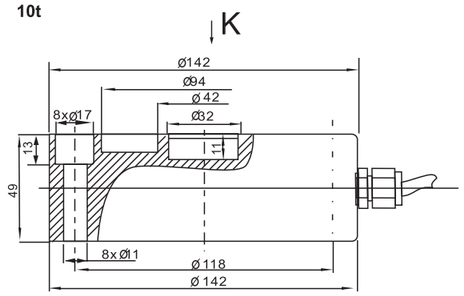

配料秤、包装秤、动态检测系统、台秤
Hopper scale,packing scale,dynamic testing system,platform scale

TECHNICAL PARAMETER| 4Wires:Exc+(红,Red);Exc-(黑,Black);Sig+(绿,Green);Sig-(白,White)

额定载荷 Rated capacities(Emax)	2,3,5,10t	温度补偿范围 Temperature range, compensated	–10℃~+40℃
灵敏度 Sensitivity	2.0±0.005mV/V	工作温度范围 Temperature range, operating	-30~+70℃
综合误差 Total error	±0.05%F.S	安全过载 Maximum safe overload	150%F.S
蠕变(30分钟)Creep error (30min)	±0.03%F.S	极限过载 Ultimate overload	200%F.S
零点平衡 Zero balance	±1%F.S	推荐激励电压 Excitation,recommend	10~12V DC
零点温度影响 TCO	±0.015%F.S/10℃	最大激励电压 Excitation,maximum	15V DC
输出温度影响 TC SPAN	±0.02%F.S/10℃	防封等级 Protection class	IP67
输入阻抗 Input impedance	350±10Ω	材质 Construction	合金钢Alloy Steel
输出阻抗 Output impedance	352±3Ω	电缆 Cable	Length:5m
绝缘电阻 Insulation impedance	≥5000MΩ		Diameter: φ6mm

LFSQ Loadcell

LFSQ

1~2t

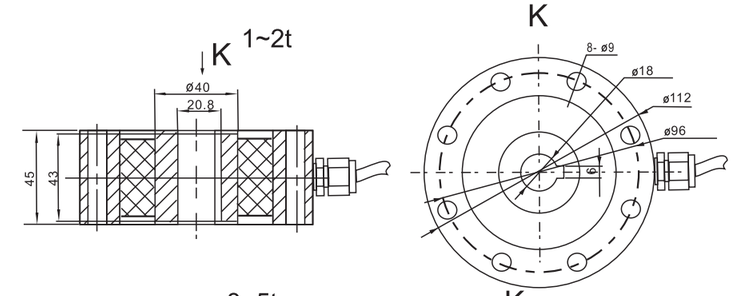

3~5t

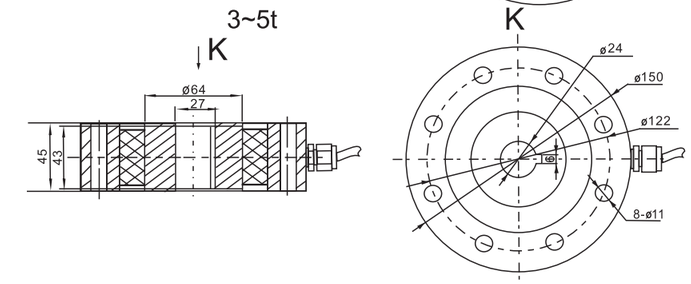

10t

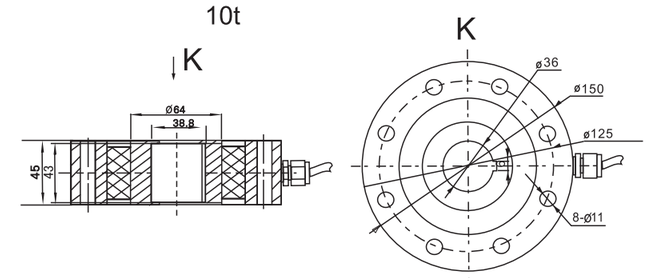

60t

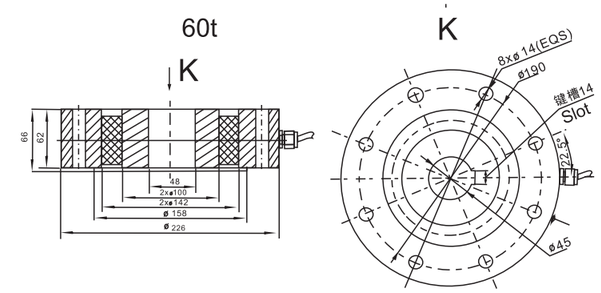

配料秤、包装秤、动态检测系统、台秤
Hopper scale,packing scale,dynamic testing system,platform scale

TECHNICAL PARAMETER| 4Wires:Exc+(红,Red);Exc-(黑,Black);Sig+(绿,Green);Sig-(白,White)

额定载荷 Rated capacities(Emax)	1,2,3,5,10,60t	温度补偿范围 Temperature range, compensated	–10℃~+40℃
灵敏度 Sensitivity	2.0±0.006mV/V	工作温度范围 Temperature range, operating	-30~+70℃
综合误差 Total error	±0.2%F.S	安全过载 Maximum safe overload	150%F.S
蠕变(30分钟)Creep error (30min)	±0.05%F.S	极限过载 Ultimate overload	200%F.S
零点平衡 Zero balance	±1%F.S	推荐激励电压 Excitation,recommend	10~12V DC
零点温度影响 TCO	±0.05%F.S/10℃	最大激励电压 Excitation,maximum	15V DC
输出温度影响 TC SPAN	±0.05%F.S/10℃	防封等级 Protection class	IP67
输入阻抗 Input impedance	400±20Ω	材质 Construction	合金钢Alloy Steel
输出阻抗 Output impedance	352±3Ω	电缆 Cable	Length:12m(1~10t),16m(60t)
绝缘电阻 Insulation impedance	≥5000MΩ		Diameter: φ6mm

WQH Loadcell

WQH

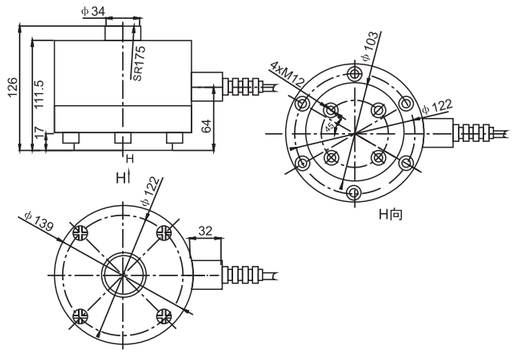

轴重秤、仓储秤、实验机 、汽车衡
Axle–laod scale, warehouse scale testing equipment，Truck Scale

TECHNICAL PARAMETER| 4Wires:Exc+(红,Red);Exc-(黑,Black);Sig+(绿,Green);Sig-(白,White)

额定载荷 Rated capacities(Emax)	20t	温度补偿范围 Temperature range, compensated	–10℃~+40℃
灵敏度 Sensitivity	2.0±0.005mV/V	工作温度范围 Temperature range, operating	-30~+70℃
综合误差 Total error	±0.05%F.S	安全过载 Maximum safe overload	150%F.S
蠕变(30分钟)Creep error (30min)	±0.05%F.S	极限过载 Ultimate overload	200%F.S
零点平衡 Zero balance	±0.05%F.S	推荐激励电压 Excitation,recommend	10~12V DC
零点温度影响 TCO	±0.05%F.S/10℃	最大激励电压 Excitation,maximum	15V DC
输出温度影响 TC SPAN	±0.05%F.S/10℃	防封等级 Protection class	IP67
输入阻抗 Input impedance	750±10Ω	材质 Construction	合金钢Alloy Steel
输出阻抗 Output impedance	703±3Ω	电缆 Cable	Length:8m
绝缘电阻 Insulation impedance	≥5000MΩ		Diameter: φ8mm

WQHY–SS Load cell

WQHY–SS

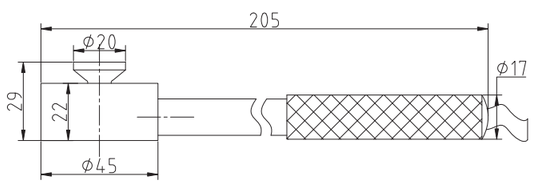

便携式小空间压式装置
Portable small space compression devices

TECHNICAL PARAMETER| 4Wires:Exc+(红,Red);Exc-(黑,Black);Sig+(绿,Green);Sig-(白,White)

额定载荷 Rated capacities(Emax)	1,2.5t	温度补偿范围 Temperature range, compensated	–10℃~+40℃
灵敏度 Sensitivity	2.0±0.02mV/V	工作温度范围 Temperature range, operating	-30~+70℃
综合误差 Total error	±0.25%F.S	安全过载 Maximum safe overload	200%F.S
蠕变(30分钟)Creep error (30min)	±0.02%F.S	极限过载 Ultimate overload	300%F.S
零点平衡 Zero balance	±1%F.S	推荐激励电压 Excitation,recommend	10~12V DC
零点温度影响 TCO	±0.02%F.S/10℃	最大激励电压 Excitation,maximum	15V DC
输出温度影响 TC SPAN	±0.02%F.S/10℃	防护等级 Protection class	IP67
输入阻抗 Input impedance	400±20Ω	材质 Construction	不锈钢Stainless Steel
输出阻抗 Output impedance	352±2Ω	电缆 Cable	
绝缘电阻 Insulation impedance	≥5000MΩ	Length: 3m	Diameter: φ4mm

LFS–A Loadcell

LFS–A

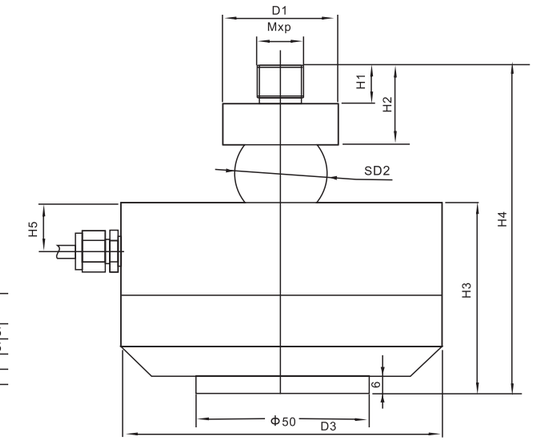

额定载荷(t) Rated Load	D1	D2	D3	M*P	H1	H2	H3	H4	H5
10	φ50	φ40	φ138	M20*1.5	17	35	74	134.5	20.55
20,25	φ65	φ50	φ165	M24*1.5	25	50	87	171	20.55
30	φ75	φ50.8	φ165	M30*1.5	25	55	86	176	21
40	φ85	φ76.2	φ165	M40*1.5	25	65	95.8	221	25.4

轴重秤、仓储秤、实验机
Axle–laod scale, warehouse scale,experimental machine

TECHNICAL PARAMETER| 4Wires:Exc+(红,Red);Exc-(黑,Black);Sig+(绿,Green);Sig-(白,White)

额定载荷 Rated capacities(Emax)	10,20,25,30,40t	温度补偿范围 Temperature range, compensated	–10℃~+40℃
灵敏度 Sensitivity	3.0±0.006mV/V	工作温度范围 Temperature range, operating	-30~+70℃
综合误差 Total error	±0.05%F.S(10~25t);±0.1%F.S(30~40t)	安全过载 Maximum safe overload	150%F.S;120%F.S(30,40t)
蠕变(30分钟)Creep error (30min)	±0.05%F.S	极限过载 Ultimate overload	250%F.S;200%F.S(30,40t)
零点平衡 Zero balance	±1%F.S	推荐激励电压 Excitation,recommend	10~12V DC
零点温度影响 TCO	±0.02%F.S/10℃	最大激励电压 Excitation,maximum	15V DC
输出温度影响 TC SPAN	±0.02%F.S/10℃	防封等级 Protection class	IP67
输入阻抗 Input impedance	400±20Ω	材质 Construction	合金钢Alloy Steel
输出阻抗 Output impedance	352±3Ω;352±5Ω(L≥15m)	电缆 Cable	Length:12m(10~25t),16m(30~40t)
绝缘电阻 Insulation impedance	≥5000MΩ		Diameter: φ6mm

LFSB–A Loadcell

LFSB–A

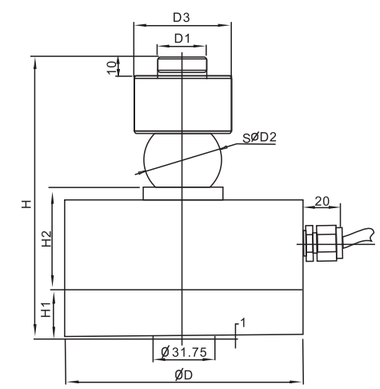

额定载荷(klb) Rated Load	D	H1	H2	H	D1	D2	D3
5~10	104.6	19.2	45.3	100	21.5	19.5	37
25,50,60	122	25	54	147	25	40	50
100	138	30	57	155	25	40	50

轴重秤、仓储秤、实验机
Axle–laod scale, warehouse scale testing equipment

TECHNICAL PARAMETER| 4Wires:Exc+(红,Red);Exc-(黑,Black);Sig+(绿,Green);Sig-(白,White)

额定载荷 Rated capacities(Emax)	5~10,25,50,60,100klb	温度补偿范围 Temperature range, compensated	–10℃~+40℃
灵敏度 Sensitivity	4.0±0.006mV/V	工作温度范围 Temperature range, operating	-30~+70℃
综合误差 Total error	±0.05%F.S;±0.1%F.S (100klb)	安全过载 Maximum safe overload	100%F.S
蠕变(30分钟)Creep error (30min)	±0.03%F.S	极限过载 Ultimate overload	120%F.S
零点平衡 Zero balance	±1%F.S	推荐激励电压 Excitation,recommend	10~12V DC
零点温度影响 TCO	±0.02%F.S/10℃	最大激励电压 Excitation,maximum	15V DC
输出温度影响 TC SPAN	±0.02%F.S/10℃	防封等级 Protection class	IP67
输入阻抗 Input impedance	400±20Ω	材质 Construction	合金钢Alloy Steel
输出阻抗 Output impedance	352±3Ω	电缆 Cable	Length:12m
绝缘电阻 Insulation impedance	≥5000MΩ		Diameter: φ6mm

NQH-A Load cell

NQH-A

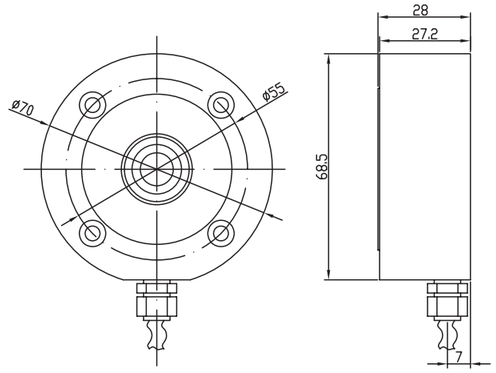

小地磅、汽车衡、料罐秤等场合
Platform scale, truck scales, weighing tank etc.

TECHNICAL PARAMETER| 4Wires:Exc+(红,Red);Exc-(黑,Black);Sig+(绿,Green);Sig-(白,White)

额定载荷 Rated capacities(Emax)	3t	温度补偿范围 Temperature range, compensated	–10℃~+40℃
灵敏度 Sensitivity	2.0±0.005mV/V	工作温度范围 Temperature range, operating	-30~+70℃
综合误差 Total error	±0.05%F.S	安全过载 Maximum safe overload	150%F.S
蠕变(30分钟)Creep error (30min)	±0.02%F.S	极限过载 Ultimate overload	300%F.S
零点平衡 Zero balance	±1%F.S	推荐激励电压 Excitation,recommend	10~12V DC
零点温度影响 TCO	±0.02%F.S/10℃	最大激励电压 Excitation,maximum	15V DC
输出温度影响 TC SPAN	±0.02%F.S/10℃	防护等级 Protection class	IP67
输入阻抗 Input impedance	1140±10Ω	材质 Construction	合金钢Alloy Steel
输出阻抗 Output impedance	1050±5Ω	电缆 Cable	
绝缘电阻 Insulation impedance	≥5000MΩ	Length: 6m	Diameter: ϕ5mm

GZLB-A Loadcell

GZLB-A

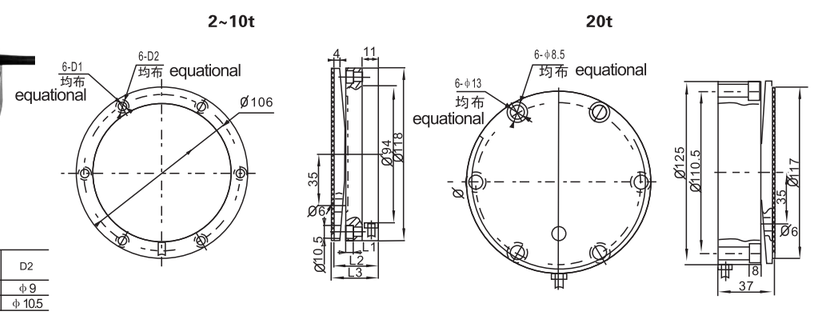

额定载荷(t) Rated Load	L1	L2	L3	D1	D2
2,5	5	30	31	ϕ5.5	ϕ9
10	8	33	34	ϕ6.6	ϕ10.5

轴重秤、称重台
Axle–laod scale, weighing platform scale

TECHNICAL PARAMETER| 4Wires:Exc+(红,Red);Exc-(黑,Black);Sig+(绿,Green);Sig-(白,White)

额定载荷 Rated capacities(Emax)	2,5,10,20t	温度补偿范围 Temperature range, compensated	–10℃~+40℃
灵敏度 Sensitivity	1.7±0.005mV/V(2~10t)	工作温度范围 Temperature range, operating	-30~+70℃
	2.0±0.01 mV/V(20t)	安全过载 Maximum safe overload	150%F.S
综合误差 Total error	±0.3%F.S(2~10t);±0.5%F.S（20t）	极限过载 Ultimate overload	200%F.S
蠕变(30分钟)Creep error (30min)	±0.3%F.S	推荐激励电压 Excitation,recommend	10~12V DC
零点平衡 Zero balance	±1%F.S	最大激励电压 Excitation,maximum	15V DC
零点温度影响 TCO	±0.02%F.S/10℃	防封等级 Protection class	IP67
输出温度影响 TC SPAN	±0.02%F.S/10℃	材质 Construction	合金钢Alloy Steel
输入阻抗 Input impedance	750±10Ω	电缆 Cable	
输出阻抗 Output impedance	702±3Ω		Length:0.5m(2~10t),6m(20t)
绝缘电阻 Insulation impedance	≥5000MΩ		Diameter: ϕ5mm

LFSC-A Loadcell

LFSC-A

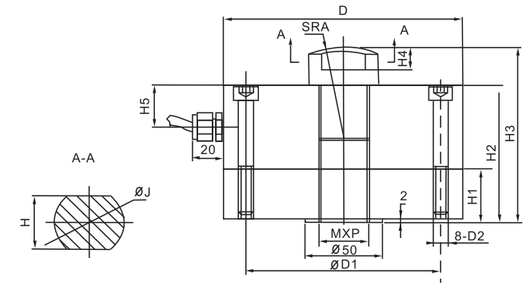

额定载荷(t) Rated Load	D	M*P	H1	H2	H3	H4	H5	H	ϕJ	A	D1	D2
1,2,3	ϕ105	M14*2	25	70	85	10	22.5	20	ϕ25	40	90	M6x55
5	ϕ120	M20*1.5	30	80	95	10	25	25	ϕ30	45	104.5	M8x65
10,20	ϕ155	M32*2	35	90	115	15	27.5	35	ϕ45	60	133	M10x75

轴重秤、仓储秤、实验机
Axle–laod scale, warehouse scale ,experimental machine

TECHNICAL PARAMETER| 4Wires:Exc+(红,Red);Exc-(黑,Black);Sig+(绿,Green);Sig-(白,White)

额定载荷 Rated capacities(Emax)	1,2,3,5,10,20t	温度补偿范围 Temperature range, compensated	–10℃~+40℃
灵敏度 Sensitivity	2.0±0.006mV/V	工作温度范围 Temperature range, operating	-30~+70℃
综合误差 Total error	±0.05%F.S(2,3,5t);±0.1%F.S（10,20t）	安全过载 Maximum safe overload	150%F.S
蠕变(30分钟)Creep error (30min)	±0.03%F.S	极限过载 Ultimate overload	200%F.S
零点平衡 Zero balance	±1%F.S	推荐激励电压 Excitation,recommend	10~12V DC
零点温度影响 TCO	±0.02%F.S/10℃	最大激励电压 Excitation,maximum	15V DC
输出温度影响 TC SPAN	±0.02%F.S/10℃	防封等级 Protection class	IP67
输入阻抗 Input impedance	400±20Ω	材质 Construction	合金钢Alloy Steel
输出阻抗 Output impedance	352±3Ω	电缆 Cable	Length:12m
绝缘电阻 Insulation impedance	≥5000MΩ		Diameter: ϕ6mm

LFSCM-A125KN Load cell

LFSCM-A125KN

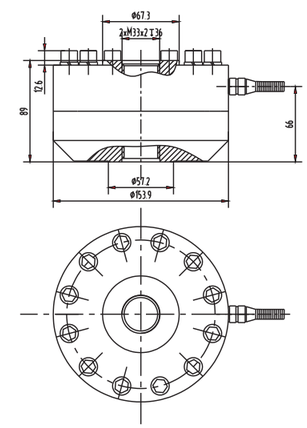

实验机
experimental machine

TECHNICAL PARAMETER| 4Wires:Exc+(红,Red);Exc-(黑,Black);Sig+(绿,Green);Sig-(白,White)

额定载荷 Rated capacities(Emax)	125KN	工作温度范围 Temperature range, operating	-30~+70℃
灵敏度 Sensitivity	2.0±0.01mV/V	安全过载 Maximum safe overload	200%F.S
综合误差 Total error	±0.3%F.S	极限过载 Ultimate overload	300%F.S
蠕变(30分钟)Creep error (30min)	±0.1%F.S	推荐激励电压 Excitation,recommend	10~12V DC
零点平衡 Zero balance	±1%F.S	最大激励电压 Excitation,maximum	15V DC
零点温度影响 TCO	±0.05%F.S/10℃	防护等级 Protection class	IP68
输出温度影响 TC SPAN	±0.05%F.S/10℃	材质 Construction	合金钢Alloy Steel
输入阻抗 Input impedance	400±20Ω	电缆 Cable	
输出阻抗 Output impedance	352±5Ω	Length: 12m	Diameter: ϕ6mm
绝缘电阻 Insulation impedance	≥5000MΩ		

YBSFC Loadcell

YBSFC

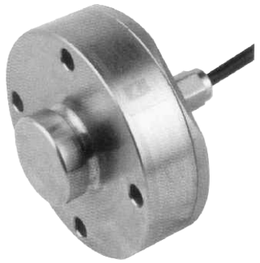

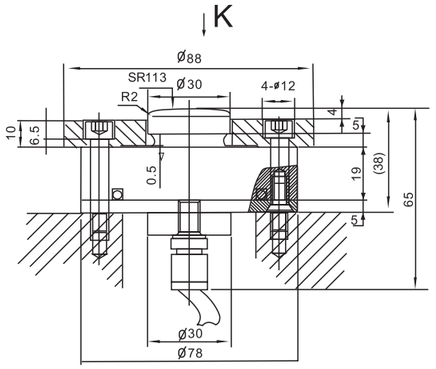

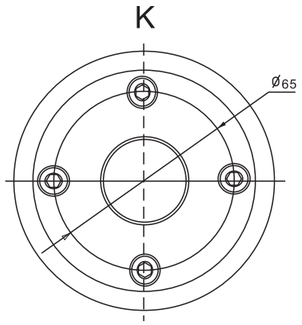

轮轴识别器、各种压式测力场合
Axle wheel identify unit,compression testing situation

TECHNICAL PARAMETER| 4Wires:Exc+(红,Red);Exc-(黑,Black);Sig+(绿,Green);Sig-(白,White)

额定载荷 Rated capacities(Emax)	3t	温度补偿范围 Temperature range, compensated	–10℃~+40℃
灵敏度 Sensitivity	1.2±0.15mV/V	工作温度范围 Temperature range, operating	-30~+70℃
综合误差 Total error	±2%F.S	安全过载 Maximum safe overload	120%F.S
蠕变(30分钟)Creep error (30min)	±0.05%F.S	极限过载 Ultimate overload	150%F.S
零点平衡 Zero balance	2~4%F.S	推荐激励电压 Excitation,recommend	10~12V DC
零点温度影响 TCO	±0.2%F.S/10℃	最大激励电压 Excitation,maximum	15V DC
输出温度影响 TC SPAN	±0.5%F.S/10℃	防封等级 Protection class	IP67
输入阻抗 Input impedance	730±30Ω	材质 Construction	合金钢Alloy Steel
输出阻抗 Output impedance	702±3Ω	电缆 Cable	Length:7m
绝缘电阻 Insulation impedance	≥5000MΩ		Diameter: ϕ5mm

YBSG-A Loadcell

YBSG-A

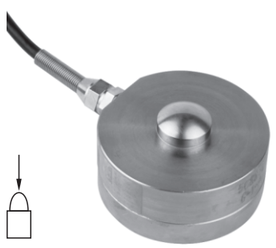

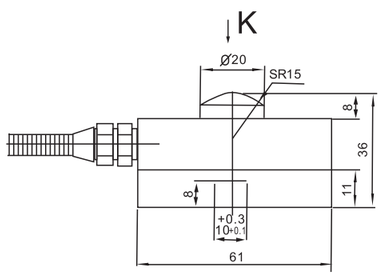

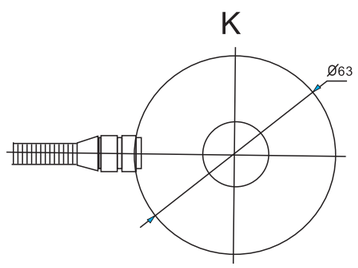

轮轴识别器
Axle wheel identify unit

TECHNICAL PARAMETER| 4Wires:Exc+(红,Red);Exc-(黑,Black);Sig+(绿,Green);Sig-(白,White)

额定载荷 Rated capacities(Emax)	1,2t	温度补偿范围 Temperature range, compensated	–10℃~+40℃
灵敏度 Sensitivity	2.0±0.1mV/V	工作温度范围 Temperature range, operating	-30~+70℃
综合误差 Total error	±0.5%F.S	安全过载 Maximum safe overload	120%F.S
蠕变(30分钟)Creep error (30min)	±0.5%F.S	极限过载 Ultimate overload	150%F.S
零点平衡 Zero balance	±1%F.S	推荐激励电压 Excitation,recommend	10~12V DC
零点温度影响 TCO	±0.2%F.S/10℃	最大激励电压 Excitation,maximum	15V DC
输出温度影响 TC SPAN	±0.2%F.S/10℃	防封等级 Protection class	IP68
输入阻抗 Input impedance	900±30Ω	材质 Construction	合金钢Alloy Steel
输出阻抗 Output impedance	700±5Ω	电缆 Cable	Length:4.5m (2t) 10m(1t)
绝缘电阻 Insulation impedance	≥5000MΩ		Diameter: ϕ5mm

YBS-A Loadcell

YBS-A

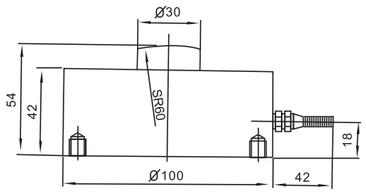

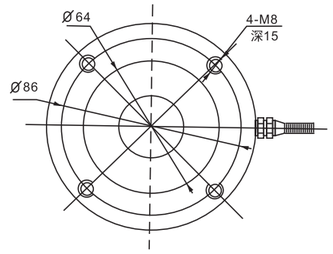

料罐秤、各种压式测力场合
Hopper scale, compression testing situatio

TECHNICAL PARAMETER| 4Wires:Exc+(红,Red);Exc-(黑,Black);Sig+(绿,Green);Sig-(白,White)

额定载荷 Rated capacities(Emax)	1,2,3,5,7.5t	温度补偿范围 Temperature range, compensated	–10℃~+40℃
灵敏度 Sensitivity	2.0±0.01mV/V	工作温度范围 Temperature range, operating	-30~+70℃
综合误差 Total error	±0.08%F.S	安全过载 Maximum safe overload	150%F.S
蠕变(30分钟)Creep error (30min)	±0.03%F.S	极限过载 Ultimate overload	200%F.S
零点平衡 Zero balance	±1%F.S	推荐激励电压 Excitation,recommend	10~12V DC
零点温度影响 TCO	±0.03%F.S/10℃	最大激励电压 Excitation,maximum	15V DC
输出温度影响 TC SPAN	±0.03%F.S/10℃	防封等级 Protection class	IP68
输入阻抗 Input impedance	750±10Ω	材质 Construction	合金钢Alloy Steel
输出阻抗 Output impedance	703±2Ω	电缆 Cable	Length:3m
绝缘电阻 Insulation impedance	≥5000MΩ		Diameter: ϕ5mm

LK-SS Loadcell

LK-SS

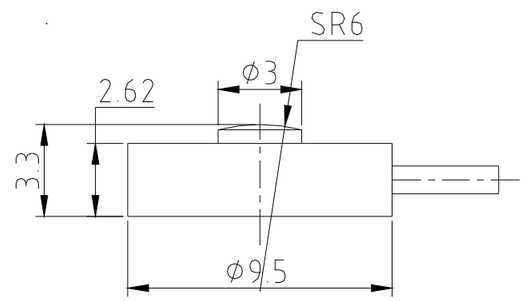

空间小的压式测力场合
Pressure testing for small space

TECHNICAL PARAMETER| 4Wires:Exc+(红,Red);Exc-(黑,Black);Sig+(绿,Green);Sig-(白,White)

额定载荷 Rated capacities(Emax)	50,100,250,500lb	温度补偿范围 Temperature range, compensated	–10℃~+40℃
灵敏度 Sensitivity	0.3~2.0mV/V	工作温度范围 Temperature range, operating	-30~+70℃
综合误差 Total error	±5%F.S	安全过载 Maximum safe overload	120%F.S
蠕变(30分钟)Creep error (30min)	±0.5%F.S	极限过载 Ultimate overload	150%F.S
零点平衡 Zero balance	±1%F.S	推荐激励电压 Excitation,recommend	5V DC
零点温度影响 TCO	±0.5%F.S/10℃	最大激励电压 Excitation,maximum	5V DC
输出温度影响 TC SPAN	±0.5%F.S/10℃	防封等级 Protection class	IP67
输入阻抗 Input impedance	370±20Ω	材质 Construction	不锈钢Stainless Steel
输出阻抗 Output impedance	352±3Ω	电缆 Cable	Length: 1m
绝缘电阻 Insulation impedance	≥5000MΩ		Diameter: ϕ3mm

YBSK-A Loadcell

YBSK-A

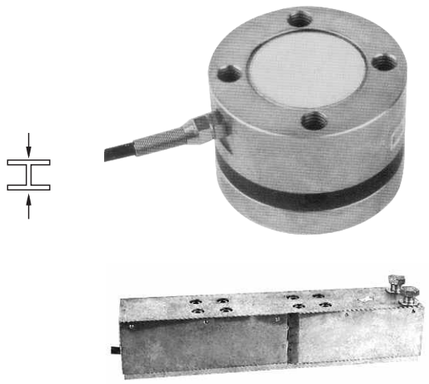

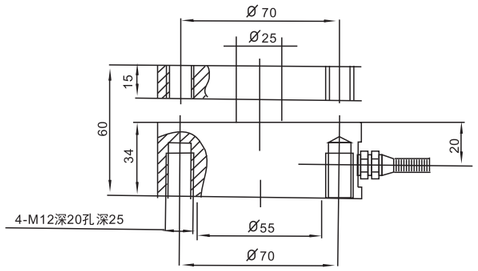

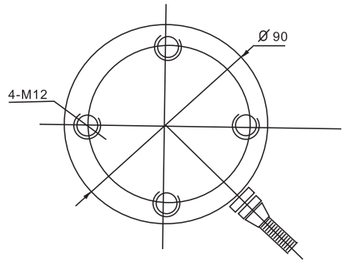

YBSK-10A模块 module

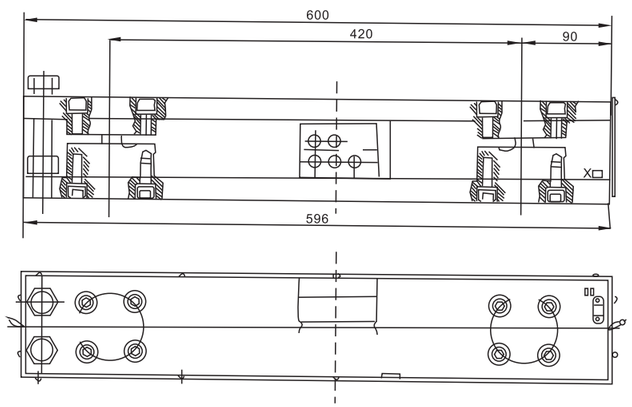

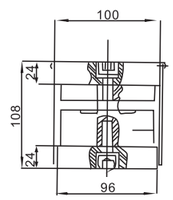

轴座计量
Axle measure

TECHNICAL PARAMETER| 4Wires:Exc+(红,Red);Exc-(黑,Black);Sig+(绿,Green);Sig-(白,White)

额定载荷 Rated capacities(Emax)	5t	温度补偿范围 Temperature range, compensated	–10℃~+40℃
灵敏度 Sensitivity	2.0±0.01mV/V	工作温度范围 Temperature range, operating	-30~+70℃
综合误差 Total error	±0.1%F.S	安全过载 Maximum safe overload	120%F.S
蠕变(30分钟)Creep error (30min)	±0.05%F.S	极限过载 Ultimate overload	180%F.S
零点平衡 Zero balance	±2%F.S	推荐激励电压 Excitation,recommend	10~12V DC
零点温度影响 TCO	±0.03%F.S/10℃	最大激励电压 Excitation,maximum	15V DC
输出温度影响 TC SPAN	±0.03%F.S/10℃	防封等级 Protection class	IP68
输入阻抗 Input impedance	700±10Ω	材质 Construction	合金钢Alloy Steel
输出阻抗 Output impedance	702±3Ω	电缆 Cable	Length: 5m
绝缘电阻 Insulation impedance	≥5000MΩ		Diameter: ϕ6mm

YBSKU-A Load cell

YBSKU-A

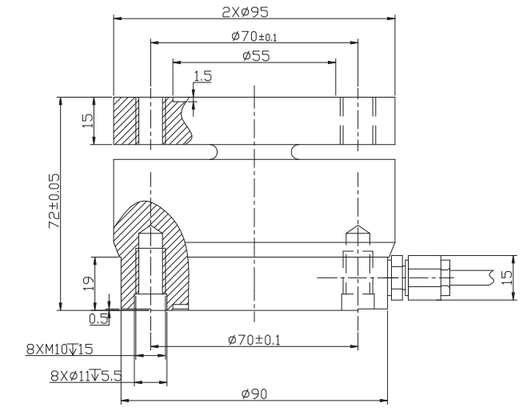

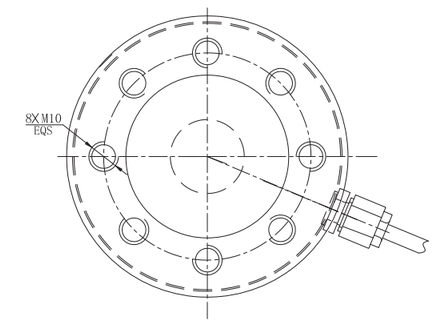

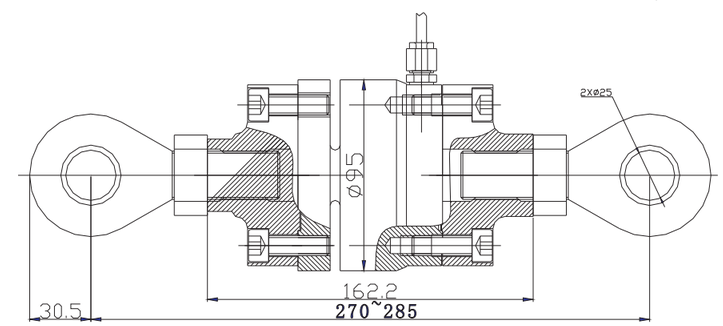

工业控制
Industrial Control

TECHNICAL PARAMETER| 4Wires:Exc+(红,Red);Exc-(黑,Black);Sig+(绿,Green);Sig-(白,White)

额定载荷 Rated capacities(Emax)	5t	温度补偿范围 Temperature range, compensated	–10~+40℃
灵敏度 Sensitivity	2.0±0.02mV/V	工作温度范围 Temperature range, operating	-30~+70℃
综合误差 Total error	±0.1%F.S	安全过载 Maximum safe overload	120%F.S
蠕变(30分钟)Creep error (30min)	±0.05%F.S	极限过载 Ultimate overload	150%F.S
零点平衡 Zero balance	±1%F.S	推荐激励电压 Excitation,recommend	10~12V DC
零点温度影响 TCO	±0.05%F.S/10℃	最大激励电压 Excitation,maximum	15V DC
输出温度影响 TC SPAN	±0.05%F.S/10℃	防护等级 Protection class	IP68
输入阻抗 Input impedance	700±20Ω	材质 Construction	合金钢Alloy Steel
输出阻抗 Output impedance	702±3Ω	电缆 Cable	
绝缘电阻 Insulation impedance	≥5000MΩ	Length: 5m	Diameter: ϕ5mm

SE Loadcell

SE

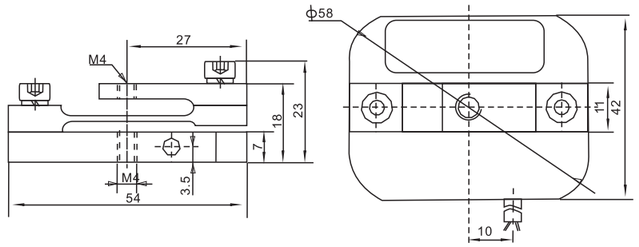

轻小台面便携秤
Small portable platform scale

TECHNICAL PARAMETER| 4Wires:Exc+(红,Red);Exc-(黑,Black);Sig+(绿,Green);Sig-(白,White)

额定载荷 Rated capacities(Emax)	8kg	温度补偿范围 Temperature range, compensated	–10℃~+40℃
灵敏度 Sensitivity	2.0±0.005mV/V	工作温度范围 Temperature range, operating	-30~+70℃
综合误差 Total error	±0.1%F.S	安全过载 Maximum safe overload	120%F.S
蠕变(30分钟)Creep error (30min)	±0.05%F.S	极限过载 Ultimate overload	150%F.S
零点平衡 Zero balance	±1%F.S	推荐激励电压 Excitation,recommend	10~12V DC
零点温度影响 TCO	±0.02%F.S/10℃	最大激励电压 Excitation,maximum	15V DC
输出温度影响 TC SPAN	±0.02%F.S/10℃	防封等级 Protection class	IP67
输入阻抗 Input impedance	450±100Ω	材质 Construction	合金钢Alloy Steel
输出阻抗 Output impedance	352±3Ω	电缆 Cable	Length:1m
绝缘电阻 Insulation impedance	≥5000MΩ		Diameter: φ4mm

SC Loadcell

SC

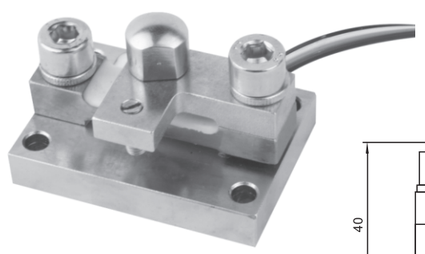

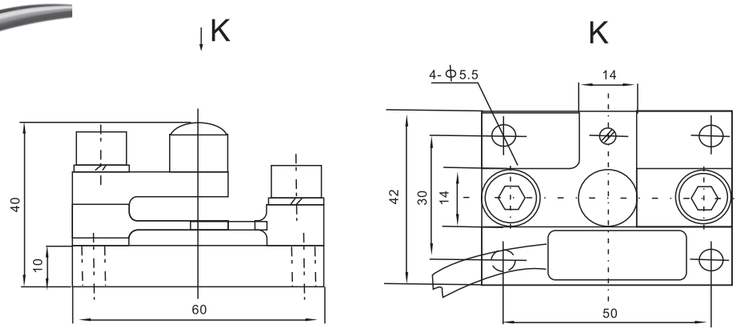

各种张力控制、过程控制
Tension control,process control

TECHNICAL PARAMETER| 4Wires:Exc+(紫, Purple);Exc-(黑, Black);Sig+(灰,Gray);Sig-(白,White)

额定载荷 Rated capacities(Emax)	15,30,45,60,100,150kg	温度补偿范围 Temperature range, compensated	–10℃~+40℃
灵敏度 Sensitivity	2.0±0.005mV/V	工作温度范围 Temperature range, operating	-30~+70℃
综合误差 Total error	±0.1%F.S	安全过载 Maximum safe overload	120%F.S
蠕变(30分钟)Creep error (30min)	±0.05%F.S	极限过载 Ultimate overload	150%F.S
零点平衡 Zero balance	±1%F.S	推荐激励电压 Excitation,recommend	10~12V DC
零点温度影响 TCO	±0.02%F.S/10℃	最大激励电压 Excitation,maximum	15V DC
输出温度影响 TC SPAN	±0.02%F.S/10℃	防封等级 Protection class	IP67
输入阻抗 Input impedance	400Ω	材质 Construction	合金钢Alloy Steel
输出阻抗 Output impedance	352±2Ω	电缆 Cable	Length:30cm(排线)
绝缘电阻 Insulation impedance	≥5000MΩ		

LS/-A/-SS/-ASS Loadcell

LS/-A/-SS/-ASS

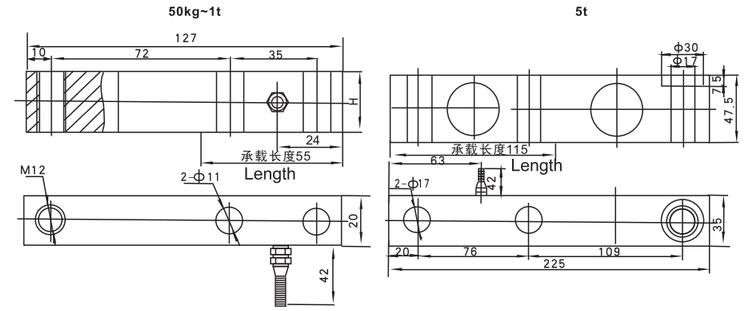

额定载荷(kg) Rated Load	H
50~250	18
500~1000	24

台秤、各种压式测力装置
Platform scale,all kinds of compression testing device

TECHNICAL PARAMETER| 4Wires:Exc+(红,Red);Exc-(黑,Black);Sig+(绿,Green);Sig-(白,White)

额定载荷 Rated capacities(Emax)	50,100,150,200,250,500kg;1,5t	温度补偿范围 Temperature range, compensated	–10℃~+40℃
灵敏度 Sensitivity	1.6±0.002mV/V(50kg);1.9±0.002mV/V(150kg);2.0±0.002mV/V	工作温度范围 Temperature range, operating	-30~+70℃
综合误差 Total error	±0.03%F.S;±0.05%F.S(5t)	安全过载 Maximum safe overload	120%F.S
蠕变(30分钟)Creep error (30min)	±0.02%F.S ;±0.03%F.S	极限过载 Ultimate overload	180%F.S
零点平衡 Zero balance	±1%F.S	推荐激励电压 Excitation,recommend	10~12V DC
零点温度影响 TCO	±0.02%F.S/10℃	最大激励电压 Excitation,maximum	15V DC
输出温度影响 TC SPAN	±0.02%F.S/10℃	防封等级 Protection class	IP67(50kg~1t);IP68(5t)
输入阻抗 Input impedance	400±20Ω	材质 Construction	合金钢Alloy Steel 不锈钢Stainless Steel
输出阻抗 Output impedance	352±3Ω	电缆 Cable	Length= 2.6 m(50kg~1t),5m(5t)
绝缘电阻 Insulation impedance	≥5000MΩ		Diameter: φ5mm(50kg~1t), φ6mm(5t)

NK-SS Loadcell

NK-SS

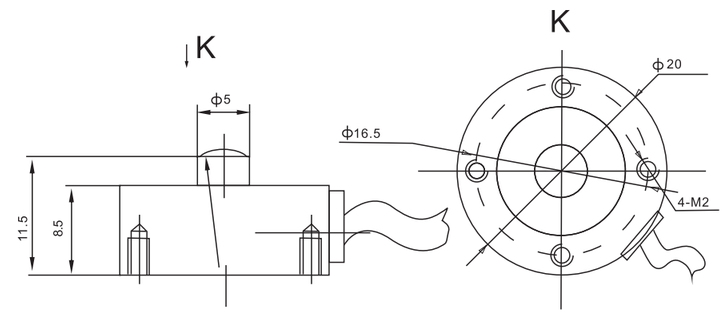

空间小的压式测力场合
Pressure testing for small space

TECHNICAL PARAMETER| 4Wires:Exc+(红,Red);Exc-(黑,Black);Sig+(绿,Green);Sig-(白,White)

额定载荷 Rated capacities(Emax)	100,200,300,500N	温度补偿范围 Temperature range, compensated	–10℃~+40℃
灵敏度 Sensitivity	1.0~1.5mV/V	工作温度范围 Temperature range, operating	-30~+70℃
综合误差 Total error	±5%F.S	安全过载 Maximum safe overload	120%F.S
蠕变(30分钟)Creep error (30min)	±0.1%F.S	极限过载 Ultimate overload	150%F.S
零点平衡 Zero balance	±1%F.S	推荐激励电压 Excitation,recommend	10V DC
零点温度影响 TCO	±0.5%F.S/10℃	最大激励电压 Excitation,maximum	10V DC
输出温度影响 TC SPAN	±0.5%F.S/10℃	防封等级 Protection class	IP67
输入阻抗 Input impedance	350±50Ω	材质 Construction	不锈钢Stainless Steel
输出阻抗 Output impedance	353±3Ω	电缆 Cable	Length:1.5m
绝缘电阻 Insulation impedance	≥5000MΩ		Diameter: φ3mm

NKE-SS Loadcell

NKE-SS

NKE-SS

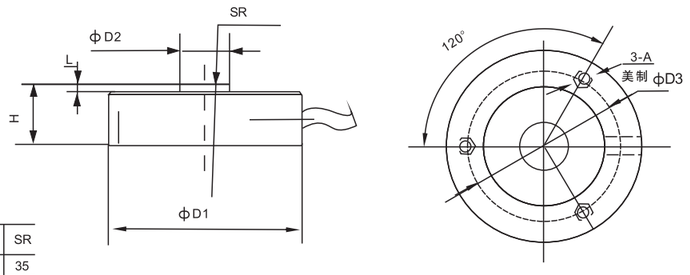

额定载荷(lb) Rated Load	D1	D2	D3	H	L	A	SR
200~2000	32	8.1	25.4	10	1.8	#6-32UNC	35
3000~5000	38	11	31.4	16	2.0	#6-32UNC	35

空间小的压式测力场合
Pressure testing for small space

TECHNICAL PARAMETER| 4Wires:Exc+(红,Red);Exc-(黑,Black);Sig+(绿,Green);Sig-(白,White)

额定载荷 Rated capacities(Emax)	200,500lb;1,2,3,5klb	温度补偿范围 Temperature range, compensated	–10℃~+40℃
灵敏度 Sensitivity	1.0~0.5mV/V	工作温度范围 Temperature range, operating	-30~+70℃
综合误差 Total error	±0.5%F.S;±1%F.S(3~5klb)	安全过载 Maximum safe overload	100%F.S
蠕变(30分钟)Creep error (30min)	±0.3%F.S	极限过载 Ultimate overload	120%F.S
零点平衡 Zero balance	±1%F.S	推荐激励电压 Excitation,recommend	10V DC
零点温度影响 TCO	±0.05%F.S/10℃	最大激励电压 Excitation,maximum	10V DC
输出温度影响 TC SPAN	±0.05%F.S/10℃	防封等级 Protection class	IP67
输入阻抗 Input impedance	380±30Ω	材质 Construction	不锈钢Stainless Steel
输出阻抗 Output impedance	350±5Ω (2~10klb); 352±3Ω (50lb~1klb);	电缆 Cable	Length:1.5m
绝缘电阻 Insulation impedance	≥5000MΩ		Diameter: ϕ3mm

HR Loadcell

HR

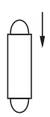

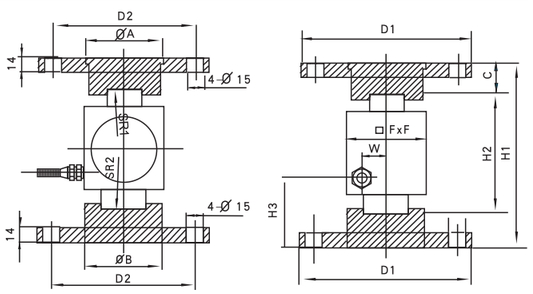

Capacity 量程(t) \ size 尺寸	H1	H2	H3	W	D1	D2	C	A	B	F	SR1	SR2
5~30t	140	100	50	13.5	ϕ130	ϕ105	20	64	60	56	150	150
40~50t	168	110	63	20	ϕ155	ϕ130	29	70	70	74	180	180

汽车衡、静态料斗秤
Truck scale,static hopper scale

TECHNICAL PARAMETER| 4Wires:Exc+(红,Red);Exc-(黑,Black);Sig+(绿,Green);Sig-(白,White)

额定载荷 Rated capacities(Emax)	5,10,20,30,40,50t	温度补偿范围 Temperature range, compensated	–10℃~+40℃
灵敏度 Sensitivity	2.0±0.005mV/V	工作温度范围 Temperature range, operating	-30~+70℃
综合误差 Total error	±0.05%F.S	安全过载 Maximum safe overload	150%F.S
蠕变(30分钟)Creep error (30min)	±0.03%F.S	极限过载 Ultimate overload	200%F.S
零点平衡 Zero balance	±1%F.S	推荐激励电压 Excitation,recommend	10~12V DC
零点温度影响 TCO	±0.03%F.S/10℃	最大激励电压 Excitation,maximum	15V DC
输出温度影响 TC SPAN	±0.03%F.S/10℃	防封等级 Protection class	IP67
输入阻抗 Input impedance	400±20Ω	材质 Construction	合金钢Alloy Steel
输出阻抗 Output impedance	352±3Ω;352±5Ω(L≥15m)	电缆 Cable	Length=L:8m(5~10t),12m(20~30t),16m(40~50t)
绝缘电阻 Insulation impedance	≥5000MΩ		Diameter: ϕ6mm

TS Loadcell

TS

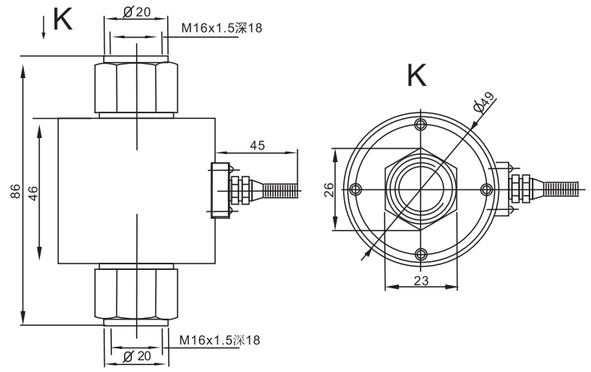

拉式测力装置，机械计量设备
Tension testing device,mechanical measuring equipment

TECHNICAL PARAMETER| 4Wires:Exc+(红,Red);Exc-(黑,Black);Sig+(绿,Green);Sig-(白,White)

额定载荷 Rated capacities(Emax)	30,50,100,500,1000kg,	温度补偿范围 Temperature range, compensated	–10℃~+40℃
灵敏度 Sensitivity	1.6±0.01mV/V(30kg~1t)	工作温度范围 Temperature range, operating	-30~+70℃
综合误差 Total error	±0.3%F.S,±0.05%F.S	安全过载 Maximum safe overload	120%F.S
蠕变(30分钟)Creep error (30min)	±0.2%F.S	极限过载 Ultimate overload	150%F.S
零点平衡 Zero balance	±1%F.S	推荐激励电压 Excitation,recommend	10~12V DC
零点温度影响 TCO	±0.05%F.S/10℃	最大激励电压 Excitation,maximum	15V DC
输出温度影响 TC SPAN	±0.05%F.S/10℃	防封等级 Protection class	IP67
输入阻抗 Input impedance	380±10Ω	材质 Construction	合金钢Alloy Steel
输出阻抗 Output impedance	352±2Ω	电缆 Cable	Length:3m
绝缘电阻 Insulation impedance	≥5000MΩ		Diameter: ϕ5mm

XZF-SS Loadcell

ZXF-SS

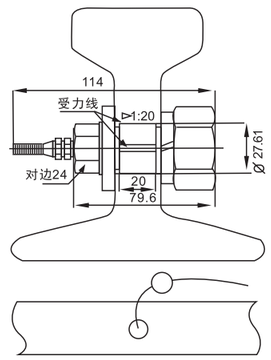

轨道衡塞入式识别器
Railway scale insert -identifier

TECHNICAL PARAMETER| 4Wires:Exc+(红,Red);Exc-(黑,Black);Sig+(绿,Green);Sig-(白,White)

额定载荷 Rated capacities(Emax)	200kN	温度补偿范围 Temperature range, compensated	–10℃~+40℃
灵敏度 Sensitivity	1.7±0.1mV/V	工作温度范围 Temperature range, operating	-30~+70℃
综合误差 Total error	±0.05%F.S	安全过载 Maximum safe overload	150%F.S
蠕变(30分钟)Creep error (30min)	±0.1%F.S	极限过载 Ultimate overload	200%F.S
零点平衡 Zero balance	±1%F.S	推荐激励电压 Excitation,recommend	10~12V DC
零点温度影响 TCO	±0.5%F.S/10℃	最大激励电压 Excitation,maximum	15V DC
输出温度影响 TC SPAN	±0.5%F.S/10℃	防封等级 Protection class	IP67
输入阻抗 Input impedance	383±5Ω	材质 Construction	不锈钢Stainless Steel
输出阻抗 Output impedance	352±3Ω	电缆 Cable	Length:14m
绝缘电阻 Insulation impedance	≥5000MΩ		Diameter: ϕ 6mm

HND-SS Loadcell

HND-SS

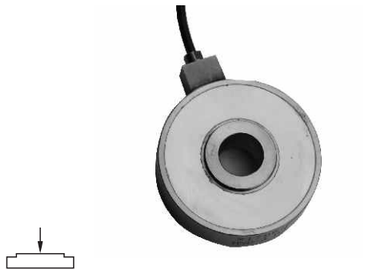

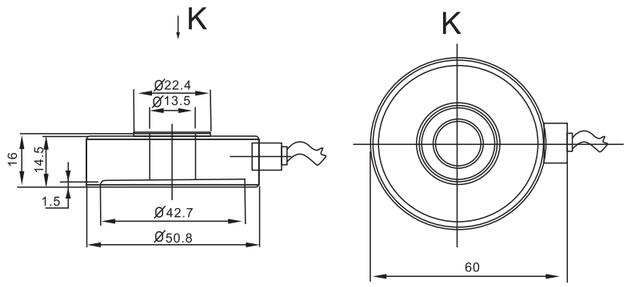

拉式测力装置、工业在线测力
Tension testing device,industrial measuring

TECHNICAL PARAMETER| 4Wires:Exc+(红,Red);Exc-(黑,Black);Sig+(绿,Green);Sig-(白,White)

额定载荷 Rated capacities(Emax)	3klb	温度补偿范围 Temperature range, compensated	–10℃~+40℃
灵敏度 Sensitivity	1.5±0.03mV/V	工作温度范围 Temperature range, operating	-30~+70℃
综合误差 Total error	±0.5%F.S	安全过载 Maximum safe overload	150%F.S
蠕变(30分钟)Creep error (30min)	±0.1%F.S	极限过载 Ultimate overload	200%F.S
零点平衡 Zero balance	±1%F.S	推荐激励电压 Excitation,recommend	10~12V DC
零点温度影响 TCO	±0.02%F.S/10℃	最大激励电压 Excitation,maximum	15V DC
输出温度影响 TC SPAN	±0.02%F.S/10℃	防封等级 Protection class	IP68
输入阻抗 Input impedance	380±30Ω	材质 Construction	不锈钢Stainless Steel
输出阻抗 Output impedance	352±3Ω	电缆 Cable	Length: 3m
绝缘电阻 Insulation impedance	≥5000MΩ		Diameter: ϕ3mm

HNDC-SS Loadcell

HNDC-SS

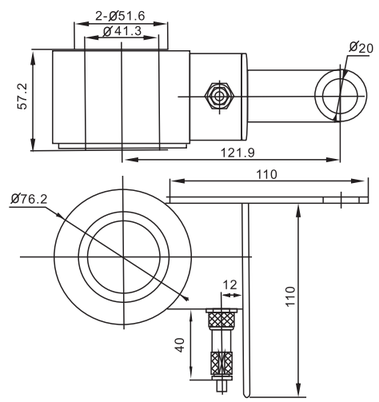

各种轴向测力场合
Axle direction tension testing

TECHNICAL PARAMETER| 4Wires:Exc+(红,Red);Exc-(黑,Black);Sig+(绿,Green);Sig-(白,White)

额定载荷 Rated capacities(Emax)	30,60,100klb	温度补偿范围 Temperature range, compensated	–10℃~+40℃
灵敏度 Sensitivity	1±0.01mV/V	工作温度范围 Temperature range, operating	-30~+70℃
综合误差 Total error	±0.5,±1%F.S	安全过载 Maximum safe overload	120%F.S
蠕变(30分钟)Creep error (30min)	±0.05%F.S	极限过载 Ultimate overload	180%F.S
零点平衡 Zero balance	±1%F.S	推荐激励电压 Excitation,recommend	10~12V DC
零点温度影响 TCO	±0.02%F.S/10℃	最大激励电压 Excitation,maximum	15V DC
输出温度影响 TC SPAN	±0.02%F.S/10℃	防封等级 Protection class	IP67
输入阻抗 Input impedance	400±20Ω	材质 Construction	不锈钢Stainless Steel
输出阻抗 Output impedance	352±3Ω	电缆 Cable	Length:5m
绝缘电阻 Insulation impedance	≥5000MΩ		Diameter: ϕ5mm

DCB Loadcell

DCB

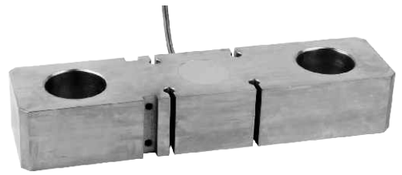

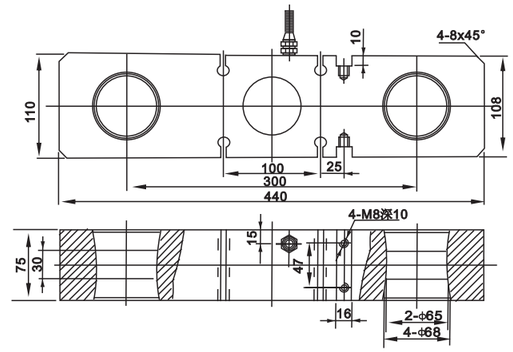

拉式测力装置
Tension measuring equipment

TECHNICAL PARAMETER| 4Wires:Exc+(红,Red);Exc-(黑,Black);Sig+(绿,Green);Sig-(白,White)

额定载荷 Rated capacities(Emax)	40t	温度补偿范围 Temperature range, compensated	–10℃~+40℃
灵敏度 Sensitivity	2.0±0.01mV/V	工作温度范围 Temperature range, operating	-30~+70℃
综合误差 Total error	±0.05%F.S	安全过载 Maximum safe overload	120%F.S
蠕变(30分钟)Creep error (30min)	±0.03%F.S	极限过载 Ultimate overload	150%F.S
零点平衡 Zero balance	±1%F.S	推荐激励电压 Excitation,recommend	10~12V DC
零点温度影响 TCO	±0.05%F.S/10℃	最大激励电压 Excitation,maximum	15V DC
输出温度影响 TC SPAN	±0.05%F.S/10℃	防封等级 Protection class	IP67
输入阻抗 Input impedance	380± 20Ω	材质 Construction	合金钢Alloy Steel
输出阻抗 Output impedance	352±3Ω	电缆 Cable	Length:20m
绝缘电阻 Insulation impedance	≥5000MΩ		Diameter: ϕ6mm

NB-A Loadcell

NB-A

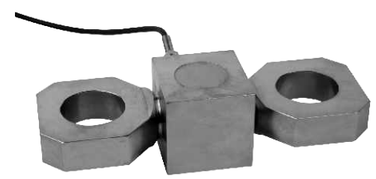

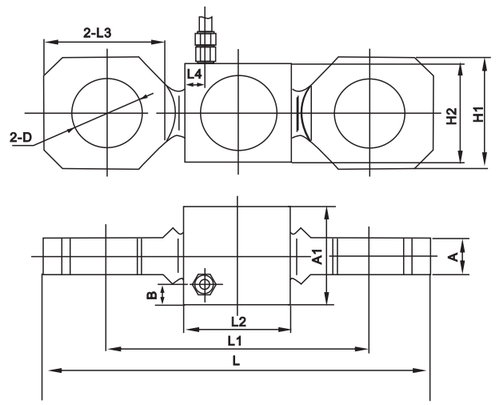

额定载荷(kg) Rated Load	L	L1	L2	L3	L4	H1	H2	A	A1	B	D
2,3	154	104	42	48	8	50	40	15	40	8.5	ϕ32
5	211	141	63	62	16.8	68	58	20	55	8.5	ϕ35
10	241	161	64	78	17.3	85	68	25	62	8.75	ϕ47
15,20	310	202	80	102	20	108	80	35	70	10	ϕ55
30	351	227	85	118	23	118	85	40	75	10	ϕ62

吊钩秤、拉式测力装置
Crane scale, tension measuring equipment

TECHNICAL PARAMETER| 4Wires:Exc+(红,Red);Exc-(黑,Black);Sig+(绿,Green);Sig-(白,White)

额定载荷 Rated capacities(Emax)	2,3,5,10,15,20,30t	温度补偿范围 Temperature range, compensated	–10℃~+40℃
灵敏度 Sensitivity	1.8±0.005mV/V	工作温度范围 Temperature range, operating	-30~+70℃
综合误差 Total error	±0.05%F.S	安全过载 Maximum safe overload	120%F.S
蠕变(30分钟)Creep error (30min)	±0.03%F.S	极限过载 Ultimate overload	180%F.S
零点平衡 Zero balance	±1%F.S	推荐激励电压 Excitation,recommend	10~12V DC
零点温度影响 TCO	±0.02%F.S/10℃	最大激励电压 Excitation,maximum	15V DC
输出温度影响 TC SPAN	±0.02%F.S/10℃	防封等级 Protection class	IP67
输入阻抗 Input impedance	400±20Ω	材质 Construction	合金钢Alloy Steel
输出阻抗 Output impedance	352±3Ω;352±5Ω(L≥15m)	电缆 Cable	Length=L:2m(2~5t),16m(10~15t),20m(20~30t)
绝缘电阻 Insulation impedance	≥5000MΩ		Diameter: ϕ5mm

DF Loadcell

DF

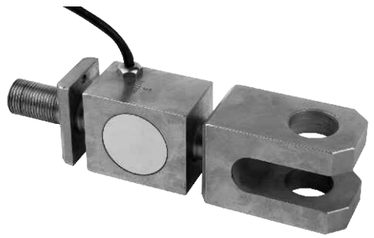

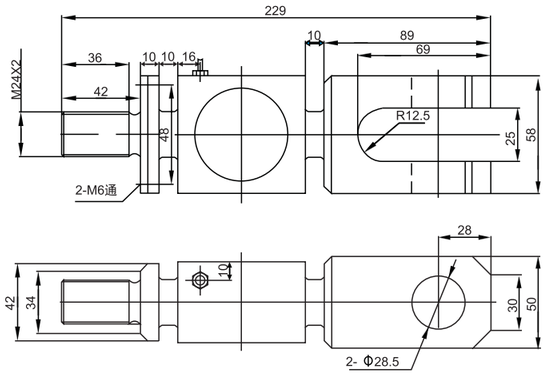

吊钩秤
Crane scale

TECHNICAL PARAMETER| 4Wires:Exc+(红,Red);Exc-(黑,Black);Sig+(绿,Green);Sig-(白,White)

额定载荷 Rated capacities(Emax)	3,5t	温度补偿范围 Temperature range, compensated	–10℃~+40℃
灵敏度 Sensitivity	1.8±0.002mV/V	工作温度范围 Temperature range, operating	-30~+70℃
综合误差 Total error	±0.05%F.S	安全过载 Maximum safe overload	120%F.S
蠕变(30分钟)Creep error (30min)	±0.03%F.S	极限过载 Ultimate overload	180%F.S
零点平衡 Zero balance	±1%F.S	推荐激励电压 Excitation,recommend	10~12V DC
零点温度影响 TCO	±0.02%F.S/10℃	最大激励电压 Excitation,maximum	15V DC
输出温度影响 TC SPAN	±0.02%F.S/10℃	防封等级 Protection class	IP67
输入阻抗 Input impedance	400±20Ω	材质 Construction	合金钢Alloy Steel
输出阻抗 Output impedance	352±3Ω	电缆 Cable	Length:0.5m
绝缘电阻 Insulation impedance	≥5000MΩ		Diameter: ϕ6mm

DFF Loadcell

DFF

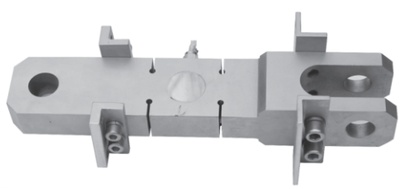

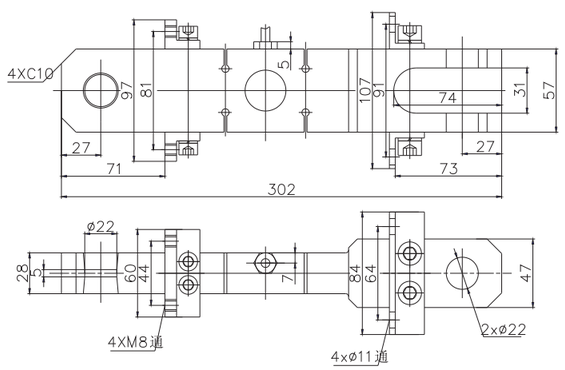

吊钩秤
Crane scale

TECHNICAL PARAMETER| 4Wires:Exc+(红,Red);Exc-(黑,Black);Sig+(绿,Green);Sig-(白,White)

额定载荷 Rated capacities(Emax)	7.5t	温度补偿范围 Temperature range, compensated	–10℃~+40℃
灵敏度 Sensitivity	2.0±0.005mV/V	工作温度范围 Temperature range, operating	-30~+70℃
综合误差 Total error	±0.05%F.S	安全过载 Maximum safe overload	120%F.S
蠕变(30分钟)Creep error (30min)	±0.03%F.S	极限过载 Ultimate overload	180%F.S
零点平衡 Zero balance	±1%F.S	推荐激励电压 Excitation,recommend	10~12V DC
零点温度影响 TCO	±0.02%F.S/10℃	最大激励电压 Excitation,maximum	15V DC
输出温度影响 TC SPAN	±0.02%F.S/10℃	防封等级 Protection class	IP67
输入阻抗 Input impedance	400±20Ω	材质 Construction	合金钢Alloy Steel
输出阻抗 Output impedance	352±3Ω	电缆 Cable	Length:1m
绝缘电阻 Insulation impedance	≥5000MΩ		Diameter: ϕ5mm

DFFB Loadcell

DFFB

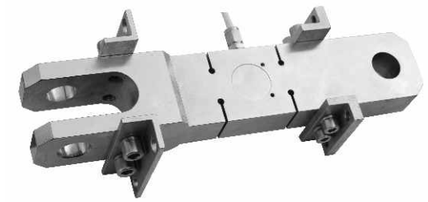

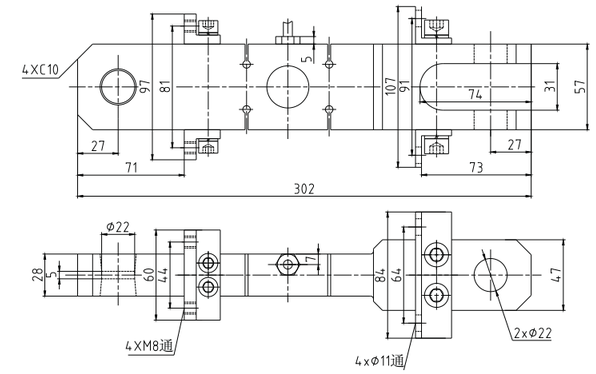

吊钩秤
Crane scale

TECHNICAL PARAMETER| 4Wires:Exc+(红,Red);Exc-(黑,Black);Sig+(绿,Green);Sig-(白,White)

额定载荷 Rated capacities(Emax)	3,5,7.5t	温度补偿范围 Temperature range, compensated	–10℃~+40℃
灵敏度 Sensitivity	2.0±0.005mV/V	工作温度范围 Temperature range, operating	-30~+70℃
综合误差 Total error	±0.05%F.S	安全过载 Maximum safe overload	120%F.S
蠕变(30分钟)Creep error (30min)	±0.03%F.S	极限过载 Ultimate overload	180%F.S
零点平衡 Zero balance	±1%F.S	推荐激励电压 Excitation,recommend	10~12V DC
零点温度影响 TCO	±0.02%F.S/10℃	最大激励电压 Excitation,maximum	15V DC
输出温度影响 TC SPAN	±0.02%F.S/10℃	防封等级 Protection class	IP67
输入阻抗 Input impedance	400±20Ω	材质 Construction	合金钢Alloy Steel
输出阻抗 Output impedance	352±3Ω	电缆 Cable	Length:1m
绝缘电阻 Insulation impedance	≥5000MΩ		Diameter: ϕ5mm

BHS Loadcell

BHS

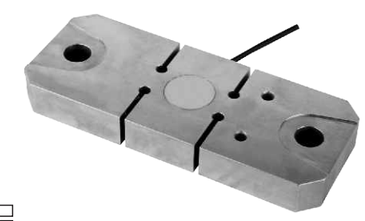

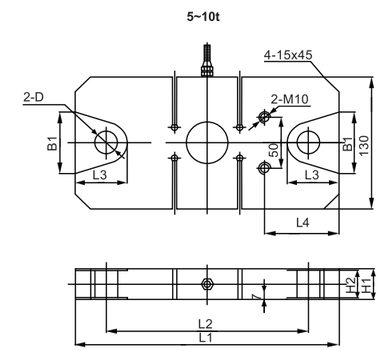

额定载荷(t) Rated Load	L1	L2	L3	H1	H2	B1	D	L4
5	255	201	50	30	28	60	ϕ22	72
10	295	215	70	40	38	84	ϕ28	92

吊钩秤、料斗秤、包装秤、过载限位
Crane scale,hopper scale,packing scale,overload limiter

TECHNICAL PARAMETER| 4Wires:Exc+(红,Red);Exc-(黑,Black);Sig+(绿,Green);Sig-(白,White)

额定载荷 Rated capacities(Emax)	5,10t	温度补偿范围 Temperature range, compensated	–10℃~+40℃
灵敏度 Sensitivity	2±0.002mV/V	工作温度范围 Temperature range, operating	-30~+70℃
综合误差 Total error	±0.05%F.S	安全过载 Maximum safe overload	120%F.S
蠕变(30分钟)Creep error (30min)	±0.03%F.S	极限过载 Ultimate overload	180%F.S
零点平衡 Zero balance	±1%F.S	推荐激励电压 Excitation,recommend	10~12V DC
零点温度影响 TCO	±0.02%F.S/10℃	最大激励电压 Excitation,maximum	15V DC
输出温度影响 TC SPAN	±0.02%F.S/10℃	防封等级 Protection class	IP67
输入阻抗 Input impedance	400±20Ω	材质 Construction	合金钢Alloy Steel
输出阻抗 Output impedance	352±3Ω	电缆 Cable	Length:12m
绝缘电阻 Insulation impedance	≥5000MΩ		Diameter: ϕ5mm

BHS Loadcell

BHS

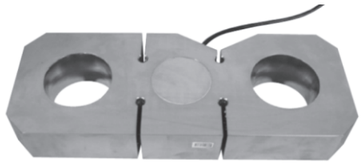

15~30t

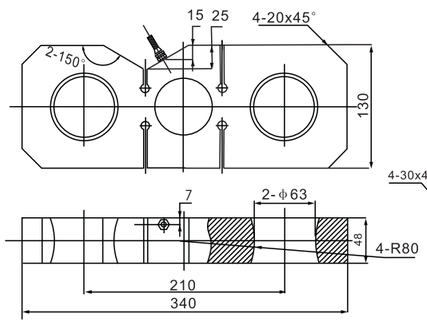

50t

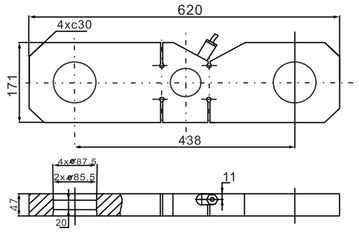

100~150t

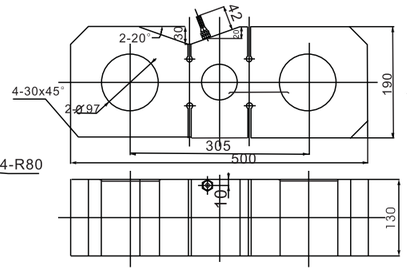

吊钩秤、料斗秤、包装秤、过载限位
Crane scale,hopper scale,packing scale, overload limiter

TECHNICAL PARAMETER| 4Wires:Exc+(红,Red);Exc-(黑,Black);Sig+(绿,Green);Sig-(白,White)

额定载荷 Rated capacities(Emax)	15,20,30,50,100,150t	温度补偿范围 Temperature range, compensated	–10℃~+40℃
灵敏度 Sensitivity	2.0±0.002mV/V(15~50t);1.5±0.01mV/V(100~150t)	工作温度范围 Temperature range, operating	-30~+70℃
综合误差 Total error	±0.05%F.S	安全过载 Maximum safe overload	120%F.S
蠕变(30分钟)Creep error (30min)	±0.02%F.S	极限过载 Ultimate overload	150%F.S
零点平衡 Zero balance	±1%F.S	推荐激励电压 Excitation,recommend	10~12V DC
零点温度影响 TCO	±0.02%F.S/10℃	最大激励电压 Excitation,maximum	15V DC
输出温度影响 TC SPAN	±0.02%F.S/10℃	防封等级 Protection class	IP67
输入阻抗 Input impedance	400±20Ω	材质 Construction	合金钢Alloy Steel
输出阻抗 Output impedance	352±3Ω	电缆 Cable	Length:12m(15~30t,100~150t),10m(50t)
绝缘电阻 Insulation impedance	≥5000MΩ		Diameter: φ5mm(15~30t,100~150t), φ8mm(50t)

SEBC-SS Loadcell

SEBC-SS

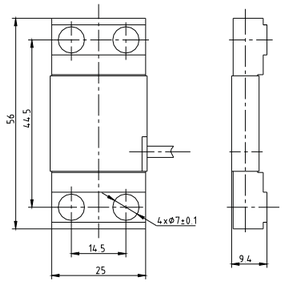

专用测力
Force testing

TECHNICAL PARAMETER| 4Wires:Exc+(绿，Green);Exc-(黑，Black);Sig+(白，White);Sig-(红，Red)

额定载荷 Rated capacities(Emax)	200kg	温度补偿范围 Temperature range, compensated	–10℃~+40℃
灵敏度 Sensitivity	1±0.1mV/V	工作温度范围 Temperature range, operating	-30~70℃
综合误差 Total error	±1%F.S	安全过载 Maximum safe overload	120%F.S
蠕变(30分钟)Creep error (30min)	±0.05%F.S	极限过载 Ultimate overload	150%F.S
零点平衡 Zero balance	±2%F.S	推荐激励电压 Excitation,recommend	10~12DC
零点温度影响 TCO	±0.05%F.S/10℃	最大激励电压 Excitation,maximum	15V DC
输出温度影响 TC SPAN	±0.05%F.S/10℃	防封等级 Protection class	IP67
输入阻抗 Input impedance	350 ±10Ω	材质 Construction	不锈钢Stainless Stell
输出阻抗 Output impedance	352±3Ω	电缆 Cable	Length: 12m
绝缘电阻 Insulation impedance	≥5000MΩ		Diameter: φ4mm

SEBE-SS Load cell

SEBE-SS

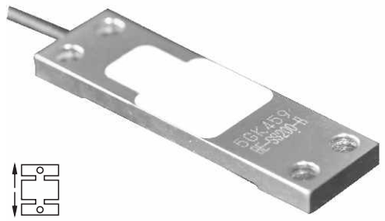

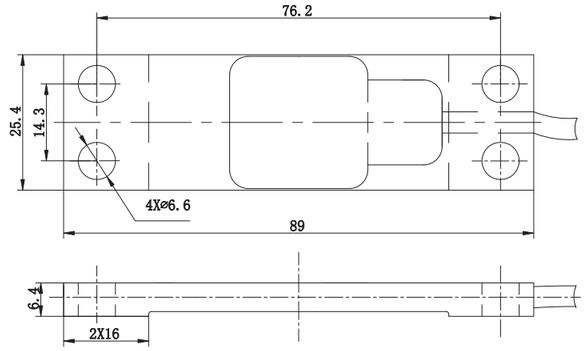

起重机、压力机、压辊
Crane、press、press roller

TECHNICAL PARAMETER| 4Wires:Exc+(红,Red);Exc-(黑,Black);Sig+(绿,Green);Sig-(白,White)

额定载荷 Rated capacities(Emax)	100,200kg	温度补偿范围 Temperature range, compensated	–10℃~+40℃
灵敏度 Sensitivity	1.0±0.15mV/V	工作温度范围 Temperature range, operating	-30~+70℃
综合误差 Total error	±4%F.S	安全过载 Maximum safe overload	150%F.S
零点平衡 Zero balance	±2%F.S	极限过载 Ultimate overload	250%F.S
零点温度影响 TCO	±0.5%F.S/10℃	推荐激励电压 Excitation,recommend	10~12V DC
输出温度影响 TC SPAN	±0.5%F.S/10℃	最大激励电压 Excitation,maximum	15V DC
输入阻抗 Input impedance	1000±10Ω	防护等级 Protection class	IP65
输出阻抗 Output impedance	1005±3Ω	材质 Construction	不锈钢Stainless Steel
绝缘电阻 Insulation impedance	≥5000MΩ	电缆 Cable	
		Length: 6m	Diameter: φ3mm

BHSP Loadcell

BHSP

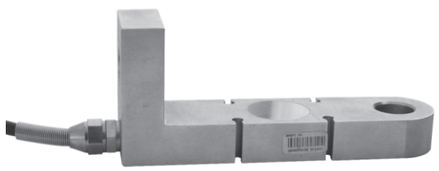

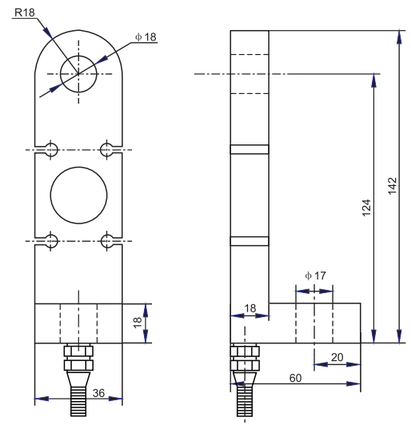

吊篮
Basket

TECHNICAL PARAMETER| 4Wires:Exc+(红,Red);Exc-(黑,Black);Sig+(绿,Green);Sig-(白,White)

额定载荷 Rated capacities(Emax)	1.5t	温度补偿范围 Temperature range, compensated	–10℃~+40℃
灵敏度 Sensitivity	1.0±0.1mV/V	工作温度范围 Temperature range, operating	-30~+70℃
综合误差 Total error	±0.3%F.S	安全过载 Maximum safe overload	150%F.S
蠕变(30分钟)Creep error (30min)	±0.05%F.S	极限过载 Ultimate overload	180%F.S
零点平衡 Zero balance	±1%F.S	推荐激励电压 Excitation,recommend	10~12V DC
零点温度影响 TCO	±0.05%F.S/10℃	最大激励电压 Excitation,maximum	15V DC
输出温度影响 TC SPAN	±0.05%F.S/10℃	防封等级 Protection class	IP67
输入阻抗 Input impedance	400±20Ω	材质 Construction	合金钢Alloy Steel
输出阻抗 Output impedance	352±3Ω	电缆 Cable	Length:3m
绝缘电阻 Insulation impedance	≥5000MΩ		Diameter: φ6mm

SCG Loadcell

SCG

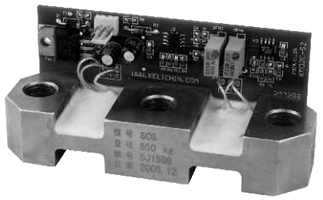

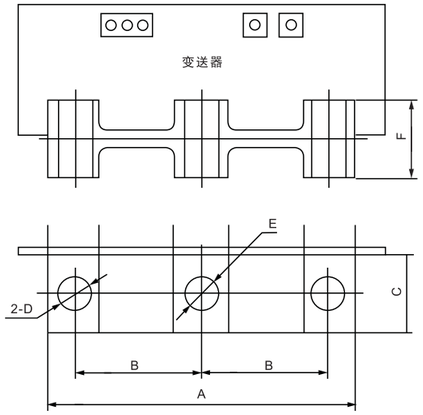

额定载荷(kg) Rated Load	A	B	C	D	E	F
350	78	32	20	φ8.5	φ8.5	20
700	86	36	30	φ8.5	φ10.5	20
850	102	41	32	φ10.5	φ10.5	20
1300	122	50	40	φ12.5	φ16.5	26

电气设备控制系统
Control system for electric equipment

TECHNICAL PARAMETER FUNCTIONPOINT

额定载荷 Rated Load	350,700,850,1300kg	拉向或压向测力，结构简单，工作可靠；	Compression or tension measuring,frame simple,work reliable.
电源Power supply	DC 24V,100mA	体积小巧，可方便的嵌入各种应用系统；	Samrt size,can be embeded into weighing system,such as power control system
传感器激励电压Excitation voltage	12V	主要应用于电力控制系统等称重测控领域；	Mainly used in weighing measuring system.Such as power control system.
非线性Non-linearity	±0.05%F.S		
输出Output	1~10V		

SCK Loadcell

SCK

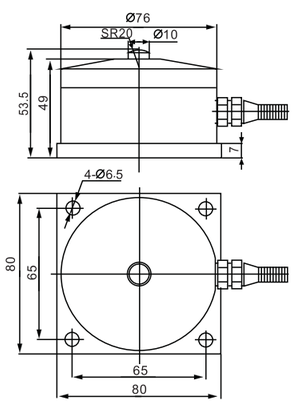

皮带秤、试验机、各种压式测力场合
Belt scale,testing equipment,all kinds of compression measuring field

TECHNICAL PARAMETER| 4Wires:Exc+(红,Red);Exc-(黑,Black);Sig+(绿,Green);Sig-(白,White)

额定载荷 Rated capacities(Emax)	15,30,45,60,100,150kg	温度补偿范围 Temperature range, compensated	–10℃~+40℃
灵敏度 Sensitivity	2.0±0.005mV/V	工作温度范围 Temperature range, operating	-30~+70℃
综合误差 Total error	±0.3%F.S	安全过载 Maximum safe overload	120%F.S
蠕变(30分钟)Creep error (30min)	±0.05%F.S	极限过载 Ultimate overload	150%F.S
零点平衡 Zero balance	±1%F.S	推荐激励电压 Excitation,recommend	10~12V DC
零点温度影响 TCO	±0.02%F.S/10℃	最大激励电压 Excitation,maximum	15V DC
输出温度影响 TC SPAN	±0.02%F.S/10℃	防封等级 Protection class	IP66
输入阻抗 Input impedance	400±20Ω	材质 Construction	合金钢Alloy Steel
输出阻抗 Output impedance	352±2Ω	电缆 Cable	Length:3m
绝缘电阻 Insulation impedance	≥2000MΩ		Diameter: φ5mm

GZB Loadcell

GZB

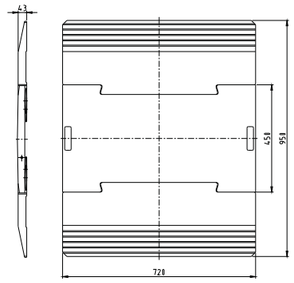

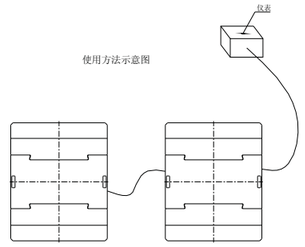

超限载
Limits contained

单台板最大轮载荷 Maximum wheel load for singe pad	10t(即单轴20t,each axle 20t)		
单台板尺寸Single pad size	720×450×43mm	静态精度/动态精度Static/Dynamic accuracy	±1~3%F.S;±5~10%F.S
电源Power Supply	内置6V-12Ah(2块可充电蓄电池,2units chargeable battery)	称重速度 Weighing speed	≤10km/h
	外置12V(直流稳压电源, A/C stable power)	单台板重量 Weighing for single pad	约20kg(含传感器)
使用温度 Temperature range,operating	-30~+70℃	橡胶引坡Rubber slope size 重量约8kg	尺寸 720x250mm

GZE Loadcell

GZE

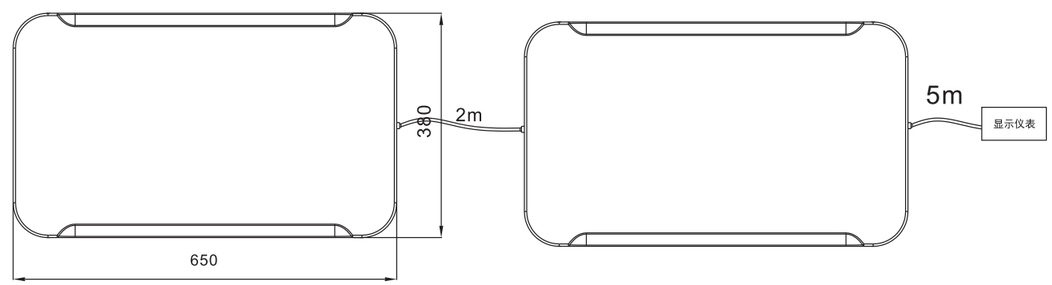

序号	项目	规格
1	安全过载 (Safe overload)	120%
2	静态精度 (Static accuracy)	±0.2%F.S
3	量程 (Capacity)	5t
4	单台尺寸 (Size)	650x380x25
5	单台板重量 (Weight)	10kg
6	适用温度 (Operation tempreature)	-30℃~70℃
7	防护等级 (Protection class)	IP66
8	秤板间连接线 (Wires)	2m(桔红色四芯线)
9	秤板到仪表 (Indicator connection)	5m(桔红色四芯线) 红：正激励；黑：负激励 绿：正信号；白：负信号

使用注意事项：Application Notice:

1、每块 秤台两端均设置接口，两块秤台不分先后，可任意组合链接。
2、链接时，导线不宜伸到车轮经过的地方，保证称量时电缆不被压断。
3、使用时选择平直的地面进行，保证检测的准确性。
4、秤台不宜浸在水中，应放在无积水的地方使用，延长系统的使用寿命。
5、使用时两秤台应平行摆放（如上图所示），间距视需检测车辆类型调整；检测时应尽量保持车辆轮胎重心在秤板的中心。

1. There are interfaces in both sides of the pad. And there is no sequence for the pads, which can be combined or connected randomly.
2. The cables should not be lied in the place where the wheels may go across during connection to ensure that the cable will not be pressed off during measurement.
3. Choose the flate floor for measurements to ensure the accuracy.
4. The pad should not be immersed in the water to extend its working life.
5. Two pads should be placed in parallel (As shown in above picture). The space between two pads will be adjusted according to different vehicle types. The barycenter of the vehicle tyres should be kept in the center of the pads as much as possible during measurements.

QCSC Load cell

QCSC

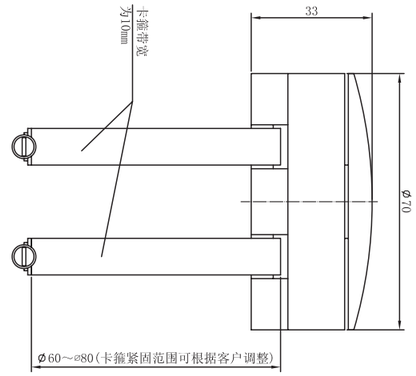

安全限制系列（刹车系统的性能检测）
Safe limiter series (function testing of brake system)

TECHNICAL PARAMETER| 4Wires:Exc+(红,Red);Exc-(黑,Black);Sig+(绿,Green);Sig-(白,White)

额定载荷 Rated capacities(Emax)	50kg	温度补偿范围 Temperature range, compensated	–10~+40℃
灵敏度 Sensitivity	0.8±0.05mV/V	工作温度范围 Temperature range, operating	-30~+70℃
综合误差 Total error	±0.5%F.S	安全过载 Maximum safe overload	150%F.S
蠕变(30分钟)Creep error (30min)	±0.2%F.S	极限过载 Ultimate overload	300%F.S
零点平衡 Zero balance	±3%F.S	推荐激励电压 Excitation,recommend	10~12V DC
零点温度影响 TCO	±0.2%F.S/10℃	最大激励电压 Excitation,maximum	15V DC
输出温度影响 TC SPAN	±0.2%F.S/10℃	防护等级 Protection class	IP67
输入阻抗 Input impedance	380±20Ω	材质 Construction	合金钢Alloy Steel
输出阻抗 Output impedance	352±3Ω	电缆 Cable	
绝缘电阻 Insulation impedance	≥5000MΩ	Length: 2m	Diameter: Φ5mm

SL Loadcell

SL

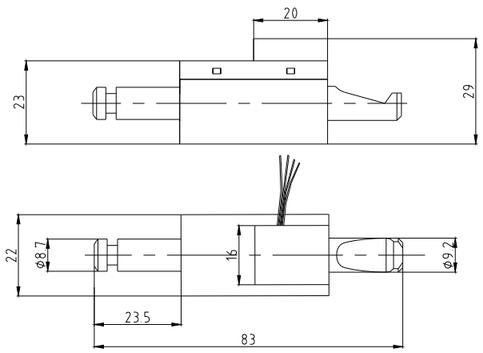

汽车测力装置
Vehicle measuring equipment

TECHNICAL PARAMETER| 4Wires:Exc+(红,Red);Exc-(黑,Black);Sig+(绿,Green);Sig-(白,White)

额定载荷 Rated capacities(Emax)	300kg	温度补偿范围 Temperature range, compensated	–10℃~+40℃
灵敏度 Sensitivity	1.0±0.003mV/V	安全过载 Maximum safe overload	150%F.S
综合误差 Total error	±0.5%F.S	极限过载 Ultimate overload	200%F.S
输入阻抗 Input impedance	400± 50Ω	推荐激励电压 Excitation,recommend	10~12V DC
输出阻抗 Output impedance	352±3Ω	最大激励电压 Excitation,maximum	15V DC
绝缘电阻 Insulation impedance	≥5000MΩ	防封等级 Protection class	IP67
工作温度范围 Temperature range, operating	-30~+70℃	材质 Construction	合金钢Alloy Steel
		电缆 Cable	Length: 20cmΦ3电缆线芯

NJ–J Load cell

NJ–J

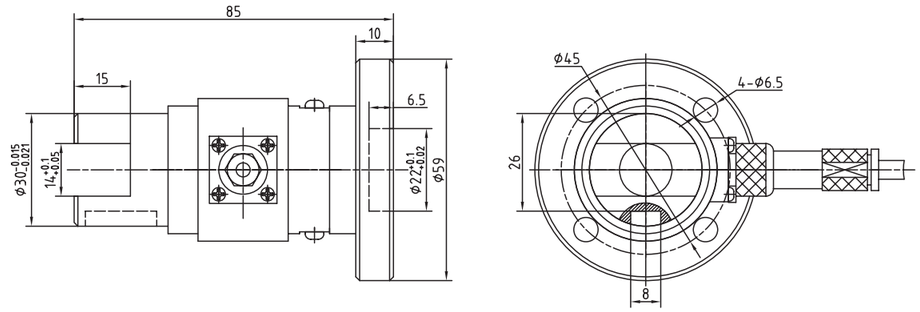

静态扭矩测试、扭矩扳手检测等场合
Static torque test, torque wrench test etc.

TECHNICAL PARAMETER| 4Wires:Exc+(红,Red);Exc-(黑,Black);Sig+(绿,Green);Sig-(白,White)

额定载荷 Rated capacities(Emax)	50,100N.m	温度补偿范围 Temperature range, compensated	–10℃~+40℃
灵敏度 Sensitivity	1.0~2.0mV/V	工作温度范围 Temperature range, operating	-30~+70℃
综合误差 Total error	±0.5;±1%F.S	安全过载 Maximum safe overload	120%F.S
蠕变(30分钟)Creep error (30min)	±0.05%F.S	极限过载 Ultimate overload	180%F.S
零点平衡 Zero balance	±1%F.S	推荐激励电压 Excitation,recommend	10~12V DC
零点温度影响 TCO	±0.03%F.S/10℃	最大激励电压 Excitation,maximum	15V DC
输出温度影响 TC SPAN	±0.03%F.S/10℃	防护等级 Protection class	IP66
输入阻抗 Input impedance	400±20Ω	材质 Construction	合金钢Alloy Steel
输出阻抗 Output impedance	352±3Ω	电缆 Cable	
绝缘电阻 Insulation impedance	≥5000MΩ	Length: 5m	Diameter: Φ5mm

DTB–A Loadcell

DTB–A

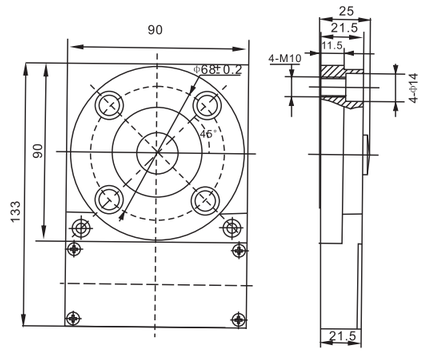

电梯
Elevator

TECHNICAL PARAMETER| 4Wires:Exc+(红,Red);Exc-(黑,Black);Sig+(绿,Green);Sig-(白,White)

额定载荷 Rated capacities(Emax)	5t	温度补偿范围 Temperature range, compensated	–10℃~+40℃
灵敏度 Sensitivity	2.0±0.002mV/V	工作温度范围 Temperature range, operating	-30~+70℃
综合误差 Total error	±0.5%F.S	安全过载 Maximum safe overload	150%F.S
蠕变(30分钟)Creep error (30min)	±0.05%F.S	极限过载 Ultimate overload	300%F.S
零点平衡 Zero balance	±1%F.S	推荐激励电压 Excitation,recommend	10~12V DC
零点温度影响 TCO	±0.03%F.S/10℃	最大激励电压 Excitation,maximum	15V DC
输出温度影响 TC SPAN	±0.03%F.S/10℃	防封等级 Protection class	IP68
输入阻抗 Input impedance	400±20Ω	材质 Construction	合金钢Alloy Steel
输出阻抗 Output impedance	352±3Ω	电缆 Cable	
绝缘电阻 Insulation impedance	≥5000MΩ		

SGEF Loadcell

SGEF

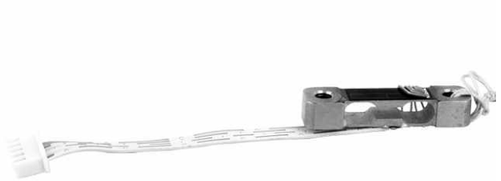

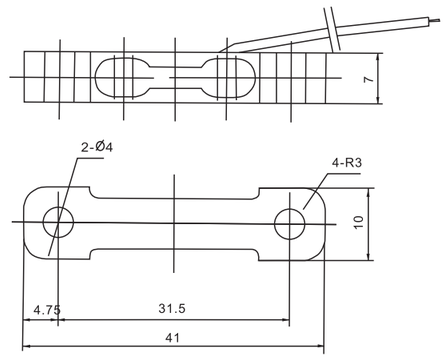

机械设备计量
Mechanical measuring equipment

TECHNICAL PARAMETER| 4Wires:Exc+(红,Red);Exc-(黑,Black);Sig+(绿,Green);Sig-(白,White)

额定载荷 Rated capacities(Emax)	2，5kg	温度补偿范围 Temperature range, compensated	–10℃~+40℃
灵敏度 Sensitivity	1.45~1.65mV/V	工作温度范围 Temperature range, operating	-10~+40℃
综合误差 Total error	±0.2%F.S	安全过载 Maximum safe overload	120%F.S
蠕变(30分钟)Creep error (30min)	±0.1%F.S	极限过载 Ultimate overload	150%F.S
零点平衡 Zero balance	±5%F.S	推荐激励电压 Excitation,recommend	10~12V DC
输入阻抗 Input impedance	375±25Ω	最大激励电压 Excitation,maximum	15V DC
输出阻抗 Output impedance	350±5Ω	防封等级 Protection class	IP65
绝缘电阻 Insulation impedance	≥5000MΩ	材质 Construction	合金钢Alloy Steel
		电缆 Cable	Length:8cm
			Diameter: ϕ4x7/0.15排线(带插头)

LJ–A Loadcell

LJ–A

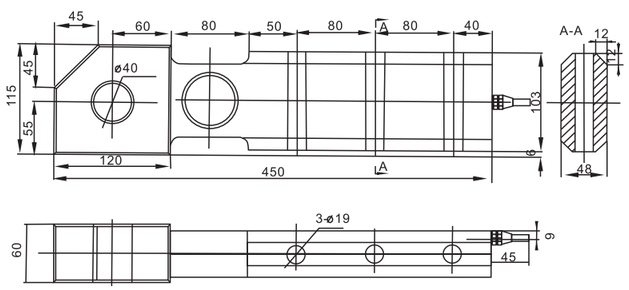

机械设备计量
Mechanical measuring equipment

TECHNICAL PARAMETER| 4Wires:Exc+(红,Red);Exc-(黑,Black);Sig+(绿,Green);Sig-(白,White)

额定载荷 Rated capacities(Emax)	5t	温度补偿范围 Temperature range, compensated	–10℃~+40℃
灵敏度 Sensitivity	1.0±0.005mV/V	工作温度范围 Temperature range, operating	-30~+70℃
综合误差 Total error	±0.1%F.S	安全过载 Maximum safe overload	200%F.S
蠕变(30分钟)Creep error (30min)	±0.1%F.S	极限过载 Ultimate overload	300%F.S
零点平衡 Zero balance	±1%F.S	推荐激励电压 Excitation,recommend	10~12V DC
零点温度影响 TCO	±0.02%F.S/10℃	最大激励电压 Excitation,maximum	15V DC
输出温度影响 TC SPAN	±0.02%F.S/10℃	防封等级 Protection class	IP68
输入阻抗 Input impedance	400±20Ω	材质 Construction	合金钢Alloy Steel
输出阻抗 Output impedance	352±3Ω	电缆 Cable	Length:5m
绝缘电阻 Insulation impedance	≥5000MΩ		Diameter: ϕ6mm

TSGC Loadcell

TSGC

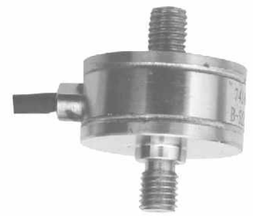

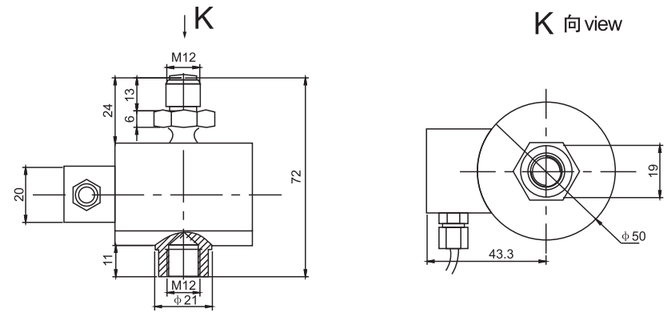

吊钩秤
Crane scale

TECHNICAL PARAMETER| 4Wires:Exc+(红,Red);Exc-(黑,Black);Sig+(绿,Green);Sig-(白,White)

额定载荷 Rated capacities(Emax)	500kg	温度补偿范围 Temperature range, compensated	–10℃~+40℃
灵敏度 Sensitivity	2.0±0.01mV/V	工作温度范围 Temperature range, operating	-30~+70℃
综合误差 Total error	±0.3%F.S	安全过载 Maximum safe overload	120%F.S
蠕变(30分钟)Creep error (30min)	±0.05%F.S	极限过载 Ultimate overload	150%F.S
零点平衡 Zero balance	±1%F.S	推荐激励电压 Excitation,recommend	10~12V DC
零点温度影响 TCO	±0.05%F.S/10℃	最大激励电压 Excitation,maximum	15V DC
输出温度影响 TC SPAN	±0.05%F.S/10℃	防封等级 Protection class	IP68
输入阻抗 Input impedance	380±30Ω	材质 Construction	合金钢Alloy Steel
输出阻抗 Output impedance	352±3Ω	电缆 Cable	Length:3m
绝缘电阻 Insulation impedance	≥5000MΩ		Diameter: ϕ5mm

LFSM Loadcell

LFSM

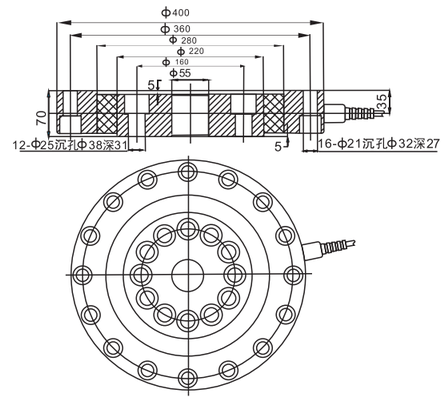

测力机
Force testing machine

TECHNICAL PARAMETER| 4Wires:Exc+(红,Red);Exc-(黑,Black);Sig+(绿,Green);Sig-(白,White)

额定载荷 Rated capacities(Emax)	50,60,100t	温度补偿范围 Temperature range, compensated	–10℃~+40℃
灵敏度 Sensitivity	2.0±0.02mV/V	工作温度范围 Temperature range, operating	-30~+70℃
综合误差 Total error	±0.2%F.S	安全过载 Maximum safe overload	120%F.S
蠕变(30分钟)Creep error (30min)	±0.03%F.S	极限过载 Ultimate overload	180%F.S
零点平衡 Zero balance	±1%F.S	推荐激励电压 Excitation,recommend	10~12V DC
零点温度影响 TCO	±0.02%F.S/10℃	最大激励电压 Excitation,maximum	15V DC
输出温度影响 TC SPAN	±0.02%F.S/10℃	防封等级 Protection class	IP67
输入阻抗 Input impedance	400±20Ω	材质 Construction	合金钢Alloy Steel
输出阻抗 Output impedance	352±3Ω	电缆 Cable	Length:14m
绝缘电阻 Insulation impedance	≥5000MΩ		Diameter: ϕ8mm

LFSMC-A Load cell

LFSMC-A

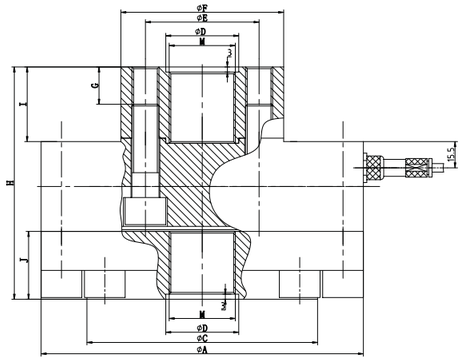

量程	⌀A	⌀C	⌀D	⌀E	⌀F	G	H	I	J	M
10t	⌀164	⌀118	$⌀34_0^{0.1}$	⌀52	⌀74	15	111	34	30	M30X2
20t	⌀190	⌀136	$⌀43_0^{0.1}$	⌀67	⌀96	22	137	44	40	M39X2

拉压两用、测力机装置
Traction and compression type force testing devices

TECHNICAL PARAMETER| 4Wires:Exc+(红,Red);Exc-(黑,Black);Sig+(绿,Green);Sig-(白,White)

额定载荷 Rated capacities(Emax)	10,20t	温度补偿范围 Temperature range, compensated	–10℃~+40℃
灵敏度 Sensitivity	2.0±0.005mV/V	工作温度范围 Temperature range, operating	-30~+70℃
综合误差 Total error	±0.1%F.S	安全过载 Maximum safe overload	150%F.S
蠕变(30分钟)Creep error (30min)	±0.05%F.S	极限过载 Ultimate overload	200%F.S
零点平衡 Zero balance	±1%F.S	推荐激励电压 Excitation,recommend	10~12V DC
零点温度影响 TCO	±0.02%F.S/10℃	最大激励电压 Excitation,maximum	15V DC
输出温度影响 TC SPAN	±0.02%F.S/10℃	防护等级 Protection class	IP67
输入阻抗 Input impedance	400±20Ω	材质 Construction	合金钢Alloy Steel
输出阻抗 Output impedance	352±3Ω	电缆 Cable	
绝缘电阻 Insulation impedance	≥5000MΩ	Length: 12m	Diameter: ϕ5mm

DTC-A Loadcell

DTC-A

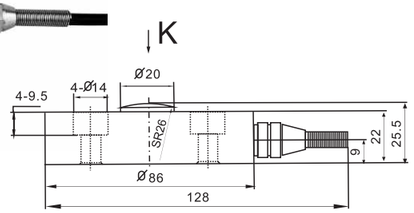

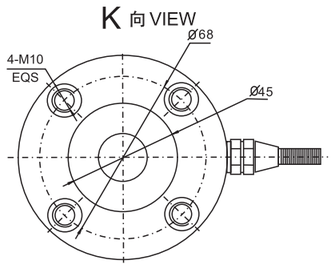

限载装置
Overload limiter

TECHNICAL PARAMETER| 4Wires:Exc+(红,Red);Exc-(黑,Black);Sig+(绿,Green);Sig-(白,White)

额定载荷 Rated capacities(Emax)	2.5t	温度补偿范围 Temperature range, compensated	–10℃~+40℃
灵敏度 Sensitivity	1.85±0.01mV/V	工作温度范围 Temperature range, operating	-30~+70℃
综合误差 Total error	±0.5%F.S	安全过载 Maximum safe overload	150%F.S
蠕变(30分钟)Creep error (30min)	±0.1%F.S	极限过载 Ultimate overload	200%F.S
零点平衡 Zero balance	±1%F.S	推荐激励电压 Excitation,recommend	10~12V DC
零点温度影响 TCO	±0.03%F.S/10℃	最大激励电压 Excitation,maximum	15V DC
输出温度影响 TC SPAN	±0.03%F.S/10℃	防封等级 Protection class	IP68
输入阻抗 Input impedance	380±20Ω	材质 Construction	合金钢Alloy Steel
输出阻抗 Output impedance	352±3Ω	电缆 Cable	Length:12m
绝缘电阻 Insulation impedance	≥5000MΩ		Diameter: ϕ5mm

DG Loadcell

DG

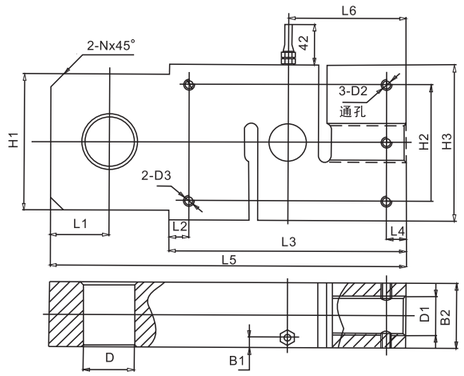

吊钩秤
Crane scale

额定载荷(t) Rated Load	L1	L2	L3	L4	L5	L6	H1	H2	H3	B1	B2	D1	D2	D3	D	N
1，3，5	28	10	130	10	190	65	54	50	70	7.5	30	M18	M6	M8	Φ27	6
7.5,10,15	45	15	180	15	270	90	105	90	120	10	50	M30	M8	M8	Φ39	10

TECHNICAL PARAMETER| 4Wires:Exc+(红,Red);Exc-(黑,Black);Sig+(绿,Green);Sig-(白,White)

额定载荷 Rated capacities(Emax)	1,3,5,7.5,10,15t	温度补偿范围 Temperature range, compensated	–10℃~+40℃
灵敏度 Sensitivity	1.8±0.1mV/V	工作温度范围 Temperature range, operating	-30~+70℃
综合误差 Total error	±0.03,±0.05%F.S	安全过载 Maximum safe overload	120%F.S(1~5t),150%F.S(7.5~15t)
蠕变(30分钟)Creep error (30min)	±0.03%F.S	极限过载 Ultimate overload	200%F.S
零点平衡 Zero balance	±1%F.S	推荐激励电压 Excitation,recommend	10~12V DC
零点温度影响 TCO	±0.02%F.S/10℃	最大激励电压 Excitation,maximum	15V DC
输出温度影响 TC SPAN	±0.02%F.S/10℃	防封等级 Protection class	IP67
输入阻抗 Input impedance	400±20Ω	材质 Construction	合金钢Alloy Steel
输出阻抗 Output impedance	352±3Ω	电缆 Cable	Length:0.5m
绝缘电阻 Insulation impedance	≥5000MΩ		Diameter: ϕ5mm

DGB Loadcell

DGB

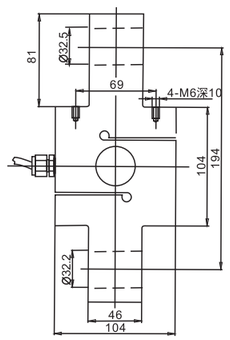

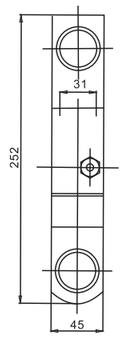

吊钩秤
Crane scale

TECHNICAL PARAMETER| 4Wires:Exc+(红,Red);Exc-(黑,Black);Sig+(绿,Green);Sig-(白,White)

额定载荷 Rated capacities(Emax)	10t	温度补偿范围 Temperature range, compensated	–10℃~+40℃
灵敏度 Sensitivity	2.0±0.01mV/V	工作温度范围 Temperature range, operating	-30~+70℃
综合误差 Total error	±0.05%F.S	安全过载 Maximum safe overload	150%F.S
蠕变(30分钟)Creep error (30min)	±0.02%F.S	极限过载 Ultimate overload	200%F.S
零点平衡 Zero balance	±1%F.S	推荐激励电压 Excitation,recommend	10~12V DC
零点温度影响 TCO	±0.02%F.S/10℃	最大激励电压 Excitation,maximum	15V DC
输出温度影响 TC SPAN	±0.02%F.S/10℃	防封等级 Protection class	IP68
输入阻抗 Input impedance	400±20Ω	材质 Construction	合金钢Alloy Steel
输出阻抗 Output impedance	352±3Ω	电缆 Cable	Length:2m
绝缘电阻 Insulation impedance	≥5000MΩ		Diameter: ϕ6mm

KTJ Load cell

KTJ

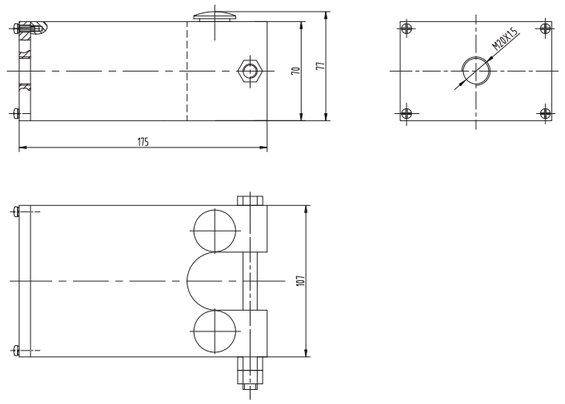

石油钻井
Petroleum drilling

TECHNICAL PARAMETER

4Wires:Exc+(红,Red);Exc-(黑,Black);Sig+(绿,Green);Sig-(白,White)

额定载荷 Rated capacities(Emax)	150kN	温度补偿范围 Temperature range, compensated	−10℃~+40℃
灵敏度 Sensitivity	1.0±0.01mV/V	工作温度范围 Temperature range, operating	-30~+70℃
综合误差 Total error	±0.5%F.S	安全过载 Maximum safe overload	150%F.S
蠕变(30分钟)Creep error (30min)	±0.05%F.S	极限过载 Ultimate overload	200%F.S
零点平衡 Zero balance	±1%F.S	推荐激励电压 Excitation,recommend	10~12V DC
零点温度影响 TCO	±0.03%F.S/10℃	最大激励电压 Excitation,maximum	15V DC
输出温度影响 TC SPAN	±0.03%F.S/10℃	防护等级 Protection class	IP67
输入阻抗 Input impedance	400±20Ω	材质 Construction	合金钢Alloy Steel
输出阻抗 Output impedance	352±3Ω	电缆 Cable	
绝缘电阻 Insulation impedance	≥5000MΩ	Length: 10m	Diameter: ϕ5mm

ILE-XS数字一体传感器

ILE-XS

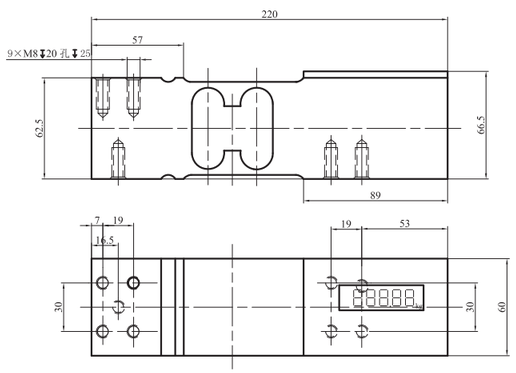

ILE-XS数字一体传感器采用高强抗干扰单片微处理器，配合高精度△-∑A/D转换技术，嵌入于模拟传感器里，显示直观，方便。

技术参数

- 准确度等级： 3级，检定分度数n=3000
- A/D转换方式： 采用Δ－Σ技术，每秒50次
- 通讯波特率： 9600 BPS
- 输入灵敏度： ≥1.5uV/e
- 传感器供桥电压： DC 3.3V
- 信号输入范围： −20mV～20mV
- 使用电源： DC 7.2V (锂离子扣式电池2节，直径:Φ25mm，120mAh)
- 使用温度为： 0℃40℃，湿度为10%～85%（RH），无冷凝。
- 存贮温度为： −20℃60℃，湿度为10%～95%（RH），无冷凝。

ILE-XS digital load cell adopts high-strength anti-jamming Single-chip microprocessor, with high-accuracy △-∑ A/D conversion technology, embedded in the analog load cell, which shows intuitive and convenient.

Technical Parameters

- Accuracy class: III, verification division n=3000
- A/D conversion mode: Δ－Σ technology, 50 times/second
- Communication baud rate: 9600 BPS
- Input sensitivity: ≥1.5uV/e
- Load cell excitation voltage: DC 3.3V
- Signal input range: −20mV～20mV
- Power supply: DC 7.2V (Lithium-ion button cell 2pcs, diameter: Φ25mm，120mAh)
- Using temperature: 0℃40℃， Humidity: 10%～85%（RH），no condensation
- Storage temperature: −20℃60℃，Humidity: 10%～95%（RH），no condensation

模拟接线盒 Analog Junction Box

SBE

H型
"H" type

盒体材料 Housing material	接线盒型号 Junction box model	接线盒编码 No.Of junction box	规格种类 Types	调节方式 Adjustment way	接线盒外形尺寸(mm) 长×宽×高 Junction Box Outer Size L*w*H(mm)	与秤体安装尺寸(mm) Install size with scale body
不锈钢 Stainless steel	SBE	JXHG01-4-S	四线 4Lines	调信号 Signal adjustment	120×142×46	120(孔径ϕ6) 与秤体侧面固定 120(Hole diameter ϕ6) And fix to the scale side
	H型 "H" type	JXHG02-4-S	四线 4Lines	调信号 Signal adjustment	160×160×52	137*137(孔径ϕ8) Hole diameter
		JXHG02-6-S	六线 6Lines	调信号 Signal adjustment		
		JXHG02-4-J	四线 4Lines	调激励 Excitation adjustment		
		JXHG02-6-J	六线 6Lines	调激励 Excitation adjustment		

SBC

T型
"T" Type

盒体材质 Housing material	接线盒型号 Junction Box model	接线盒编码 No.Of junction box	规格种类 Types	调节方式 Adjustment Way	接线盒外形尺寸(mm) 长×宽×高 Junction Box Outer Size L*w*H(mm)	与秤体安装尺寸(mm) Install size with scale body
不锈钢 Stainless Steel	SBC	JXHG03-4-S	四线 4Lines	调信号 Signal adjustment	192×136×45.5	172×36(孔径ϕ7)
		JXHG03-4-J	四线 4Lines	调激励 Excitation adjustment		
	T型 "T" Type	JXHG05-4-S	四线 4Lines	调信号 Signal adjustment	318×160×64	280*62(孔径ϕ7) (Hole diameter Φ7)
		JXHG05-6-S	六线 6Lines	调信号 Signal adjustment		
		JXHG05-8-S	八线 8Lines	调信号 Signal adjustment		
		JXHG05-10-S	十线 10Lines	调信号 Signal adjustment		
		JXHG05-4-J	四线 4Lines	调激励 Excitation adjustment		
		JXHG05-6-J	六线 6Lines	调激励 Excitation adjustment		
		JXHG05-8-J	八线 8Lines	调激励 Excitation adjustment		
		JXHG05-10-J	十线 10Lines	调激励 Excitation adjustment		
	T型-Ⅱ "T" Type	JXHG06-4-S	四线 4Lines	调信号 Signal adjustment	318×160×49	280*62(孔径ϕ7) (Hole diameter 7)
		JXHG06-6-S	六线 6Lines	调信号 Signal adjustment		
		JXHG06-4-J	四线 4Lines	调激励 Excitation adjustment		
		JXHG06-6-J	六线 6Lines	调激励 Excitation adjustment		
	T型-Ⅲ "T" Type-Ⅲ	JXHG08-4-S	四线 4Lines	调信号 Signal adjustment	220×64×38	200*30(孔径ϕ7) (Hole diameter 7)

模拟接线盒 Analog Junction Box

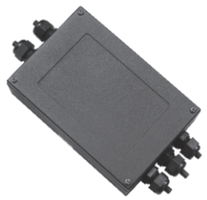

铝合金
Aluminium

铝合金
Aluminium

盒体材质 Housing material	接线盒型号 Junction Box model	接线盒编码 No.Of junction box	规格种类 Types	调节方式 Adjustment Way	接线盒外形尺寸(mm) 长×宽×高 Junction Box Outer Size L*w*H(mm)	与秤体安装尺寸(mm) Install size with scale body
铝合金 Aluminium	铝合金 Aluminium	JXHL01-4-S	四线 4Lines	调信号 Signal adjustment	180×120×45.5(四线;六线) 180*120*45.5(4lines;6lines) 236.5×150×45.5(八线;十线) 236.5*150*45.5(8lines;10lines)	168*90(孔径φ6)(四线;六线) 168*90(φ6)(4lines;6lines) 224.5*120(孔径φ6)(四线;六线) 224.5*120(φ6)
		JXHL01-6-S	六线 6Lines	调信号 Signal adjustment		
		JXHL01-8-S	八线8Lines	调信号 Signal adjustment		
		JXHL01-10-S	十线 10Lines	调信号 Signal adjustment		
		JXHL01-4-J	四线 4Lines	调激励 Excitation adjustment		
		JXHL01-6-J	六线 6Lines	调激励 Excitation adjustment		
		JXHL01-8-J	八线8Lines	调激励 Excitation adjustment		
		JXHL01-10-J	十线 10Lines	调激励 Excitation adjustment		
	铝合金-Ⅱ Aluminium-Ⅱ	JXHL02-4-S	四线 4Lines	调信号 Signal adjustment	160×107×43.5	132*95(孔径φ5)
		JXHL02-4-J	四线 4Lines	调激励 Excitation adjustment		

防爆接线盒(调信号) Explosion Proof Junction Box

SBC 型
"SBC"type

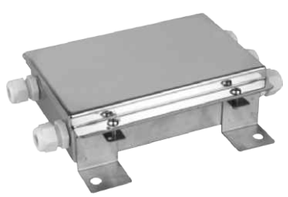

H型
"H" type

T型
"T" Type

盒体材质 Housing material	接线盒型号 Junction Box model	接线盒编码 No.Of junction box	规格种类 Types	防爆级别 Explosin-proof class	接线盒外形尺寸(mm) 长×宽×高 Junction Box Outer Size L*w*H(mm)	与秤体安装尺寸(mm) Install size with scale body
不锈钢 Stainless Steel	本 安 型 Exia	FB-JXH-4(SBC)	四线 4Lines	ExiaⅡCT6	192×136×45.5	172×36(孔径φ7)
		FB-JXH-4(H)	四线 4Lines		160×160×52	137×137(孔径φ7)
		FB-JXH-6	六线6Lines			
		FB-JXH-8	八线8Lines		318×160×64	280×62(孔径φ7)
		FB-JXH-10	十线 10Lines			

防爆接线盒 Explosion Proof Junction Box

增安型(调信号)
Add intrinsic safety

传感器供电电压 (Ui) Supply power for load cells	接线盒型号 Junction Box type	接线盒编码 No.Of junction box	防爆级别 Explosin-proof class	调接线盒外形尺寸(mm) 长*宽*高 Junction Box size L*W*H	与秤体安装尺寸(mm) Installation size with scale body	接线盒体特征 Junction box housing characteristic
Ui>12V	增安型四线-Ⅰ Add intrinsic safety 4line-Ⅰ	JXHF01-4-I	ExellBT4	239*194*100	166*158	盒盖与盒底之间无橡胶垫 With rubber washer between box cover and box bottom
7V<Ui≤12V	增安型四线-Ⅱ Add intrinsic safety 4line-Ⅱ	JXHF01-4-II				
Ui≤7V	增安型四线-Ⅲ Add intrinsic safety 4line-Ⅲ	JXHF01-4-III				

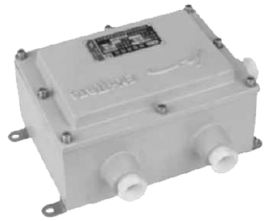

隔爆型(调信号)
Explosion-proof

传感器供电电压 (Ui) Supply power for load cells	接线盒型号 Junction Box type	接线盒编码 No.Of junction box	规格种类 Types	防爆级别 Explosin-proof class	调接线盒外形尺寸(mm) 长*宽*高 Junction Box size L*W*H	与秤体安装尺寸(mm) Installation size with scale body	接线盒体特征 Junction box housing characteristic
Ui>12V	隔爆型四线-Ⅰ Explosion-proof with 4line-Ⅰ	JXHF02-4-I	四线 4Lines	ExdⅡBT4	四线:220*210*123.5 4lines:220*210*123.5	四线:182*188 4lines:182*188	盒盖与盒底之间无橡胶垫 With rubber washer between box cover and box bottom
7V<Ui≤12V	隔爆型四线-Ⅱ Explosion-proof with 4line-Ⅱ	JXHF02-6-I	六线 6Lines				
Ui≤7V	隔爆型四线-Ⅲ Explosion-proof with 4line-Ⅲ	JXHF02-8-I	八线8Lines				
Ui>12V	隔爆型六线-Ⅰ Explosion-proof with 6line-Ⅰ	JXHF02-4-II	四线 4Lines		六线:264*259*149.5 4lines: 264*259*149.5	六线:224*227 6 lines: 224*227	
7V<Ui≤12V	隔爆型六线-Ⅱ Explosion-proof with 6line-Ⅱ	JXHF02-6-II	六线 6Lines				
Ui≤7V	隔爆型六线-Ⅲ Explosion-proof with 6line-Ⅲ	JXHF02-8-II	八线8Lines				
Ui>12V	隔爆型八线-Ⅰ Explosion-proof with 8line-Ⅰ	JXHF02-4-III	四线 4Lines		八线:360*270*168 8lines: 360*270*168	八线:274*233 8lines: 274*233	
7V<Ui≤12V	隔爆型八线-Ⅱ Explosion-proof with 8line-Ⅱ	JXHF02-6-III	六线 6Lines				
Ui≤7V	隔爆型八线-Ⅲ Explosion-proof with 8line-Ⅲ	JXHF02-8-III	八线8Lines				

关于模块、传感器安装螺栓紧固预紧力的说明

Illustration for Mounting Bolts Fastening Pretightening Force of the Weighing Modules or Load Cells

为了保证模块、传感器安装的可靠性及传感器灵敏度的一致性，经过对相应螺栓承受扭矩力的测算，现对传感器测试安装、模块组装及其他安装固定场合，要求安装螺栓紧固预紧力按如下规定执行：

In order to ensure the installation reliability of weighing modules and load cells as well as the consistency of the load cells and after measuring the torque force of the corresponding bolts, we now carry out the regulations for the mountling bolts pretightening force requirements of load cell testing and installation, weighing module installation and other installations or fixing ocasions as follows:

安装螺纹规格 Bolt Size	预紧力(N·m) Pretightening Force (N·m)			安装螺纹规格 Bolt Size	预紧力(N·m) Pretightening Force (N·m)		
	螺栓性能 等级：8.8 Bolt Performance Grade：8.8	螺栓性能 等级：10.9 Bolt Performance Grade：10.9	螺栓性能 等级：12.9 Bolt Performance Grade：12.9		螺栓性能 等级：8.8 Bolt Performance Grade：8.8	螺栓性能 等级：10.9 Bolt Performance Grade：10.9	螺栓性能 等级：12.9 Bolt Performance Grade：12.9
M3	1.1	1.5	1.8	M16	175	250	292
M3.5	1.7	2.4	2.8	M18	248	344	402
M4	2.5	3.5	4.1	M20	353	500	571
M5	5	7	8.3	M22	480	665	776
M6	8.4	13	14	M24	796	1100	1284
M7	15	20	24	M27	891	1300	1442
M8	20	30	34.1	M30	1213	1678	1959
M10	40	60	68	M33	1647	2281	2665
M12	70	100	118	M36	2117	2929	3422
M14	112	160	188	M39	2743	3791	4432

注：

1、所有螺栓安装都要采用对角拧，先预紧后用力矩扳手按规定力矩紧固的方式，

2、铝合金传感器的预紧力M6的螺栓统一采用10 N·m，M8的螺栓统一采用25 N·m。

3、为满足以上工艺要求，建议安装时选用相应力值的力矩扳手；

4、以上各扭力的力矩扳手扭力是否准确须定期进行校准。

5、以上计算力矩是在没有使用润滑油的情况下的数值，如有使用润滑油请在原有数据上乘以0.8。

6、为防止螺纹在使用过程中松脱，增强防松功能，螺栓达到规定预紧力后可以考虑使用螺纹紧固胶进行固定。

7、模块、传感器安装时应注意两对位安装孔之间的同轴度不能超过0.3mm，切勿在安装时因擦靠而产生大的侧向力。

Notes:

1. All the installation of bolts adopts diagonal screw. Use the way that scewing with the required torque by torque wrench after pre-tightening
2. For aluminum load cells, the pretightening force for bolt M6 adopts 10 N·m and for bolt M8 adopts 25 N·m
3. The torque wrench with the same torque force is suggested during installation in order to meet the above technical requirements.
4. The torque wrenchs for above torque force should do regular calibration to keep it correct.
5. Above torque force value is listed in the condition that without lubricant, otherwise please multiply the value by 0.8
6. In order to prevent the screw thread from loosing during tightening And enhance loose prevent functions, the screw thread plastic fastener maybe used after the bolt reaches to the required pretightening force.
7. During installation for load cells or weighing modules, please pay attention to the coaxiality between two contraposition mounting holes can not be more than 0.3mm. Please be sure that there is no big lateral force occurred from friction or leaning during installation.

产品目录 INDEX

产品目录 INDEX

产品目录 INDEX

服务热线/Service free number

400 887 4165 800 857 4165

温馨提示：

样本内有关尺寸和参数仅供选型时参考，产品优化改善后恕不再另行通知，请广大用户订货前进一步与公司作沟通确认！

Indicate:

Related drawings and parameter in catalogue is for reference, please contact us to confirm before order.